IN THE SUN P 190

DCWéditions
PARIS

Pendant | *Suspension*

Material : Steel, Aluminium, Brass mesh, Stainless steel mesh, Glass
Matériaux : *Acier, Aluminium, Toile laiton, Toile acier inoxydable, Verre*

Cable length | Longueur du câble : 3 m

Net weight | *Poids net* : 1,7 kg

Packaging : 330 x 270 x 270 mm

CLI - E27 - MAX 23W LED 220V - IP 20

E27 bulb not included | *Ampoule E27 non-fournie*

IP20

SIL: Silver | *Argent*
GOL : Gold | *Or*

DCWéditions

71 rue de la Fontaine au Roi
75011 Paris – France
+33 (0)1 40 21 37 60
sales@dcwe.fr

TECHNICAL SHEET / *FICHE TECHNIQUE*

IN THE SUN PENDANT

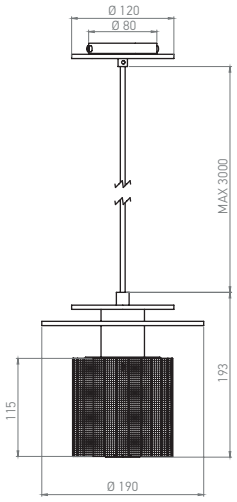

FINISHES / *FINITIONS*

ITS P 190
GOL-GOL

ITS P 190
GOL-SIL

ITS P 190
SIL-GOL

ITS P 190
SIL-SIL

IN THE SUN P 270

DCWéditions
PARIS

Pendant | *Suspension*

Material : Steel, Aluminium, Brass mesh, Stainless steel mesh, Glass
Matériaux : *Acier, Aluminium, Toile laiton, Toile acier inoxydable, Verre*

Cable length | Longueur du câble : 3 m

Net weight | *Poids net* : 2,1 kg

Packaging : 330 x 270 x 270 mm

CLI - E27 - MAX 23W LED 220V - IP 20

E27 bulb not included | *Ampoule E27 non-fournie*

IP20

SIL: Silver | *Argent*
GOL : Gold | *Or*

DCWéditions

71 rue de la Fontaine au Roi
75011 Paris – France
+33 (0)1 40 21 37 60
sales@dcwe.fr

TECHNICAL SHEET / *FICHE TECHNIQUE*

IN THE SUN PENDANT

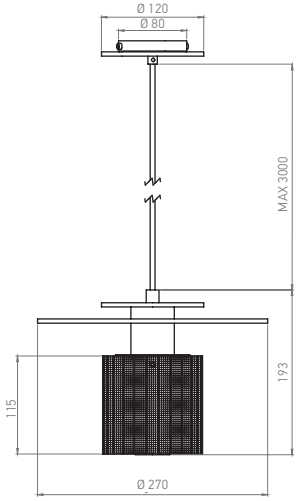

FINISHES / *FINITIONS*

ITS W 270
GOL-GOL

ITS W 270
GOL-SIL

ITS W 270
SIL-GOL

ITS W 270
SIL-SIL

IN THE SUN P 380

DCWéditions
PARIS

Pendant | *Suspension*

Material : Steel, Aluminium, Brass mesh, Stainless steel mesh, Glass
Matériaux : *Acier, Aluminium, Toile laiton, Toile acier inoxydable, Verre*

Cable length | Longueur du câble : 3 m

Net weight | *Poids net* : 2,7 kg

Packaging : 280 x 470 x 470 mm

CLI - E27 - MAX 23W LED 220V - IP 20

E27 bulb not included | *Ampoule E27 non-fournie*

IP20

SIL: Silver | *Argent*
GOL : Gold | *Or*

DCWéditions

71 rue de la Fontaine au Roi
75011 Paris – France
+33 (0)1 40 21 37 60
sales@dcwe.fr

TECHNICAL SHEET / *FICHE TECHNIQUE*

IN THE SUN PENDANT

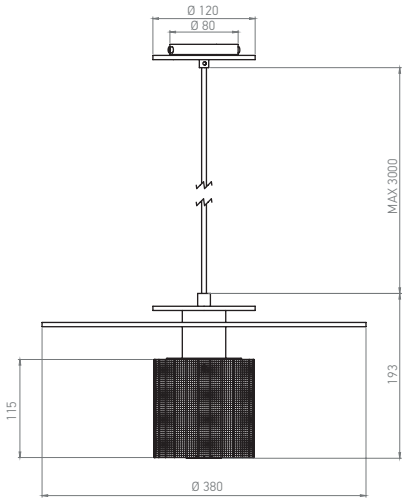

FINISHES / *FINITIONS*

ITS W 380
GOL-GOL

ITS W 380
GOL-SIL

ITS W 380
SIL-GOL

ITS W 380
SIL-SIL

IN THE SUN

DCWéditions PARIS

TECHNICAL SHEET / *FICHE TECHNIQUE*

ACCESSORIES **IN THE SUN**

SPACER 1

MATERIAL : Steel | *Acier*

DIMENSIONS : 25 x Ø 126 mm

FINISHES : Gold or Silver | *Or ou Argent*

Essential accessory for a composition by superposition of 2 or more ITS Wall Lamps | *Accessoire indispensable pour une composition par superposition de 2 ou plus ITS Wall Lamps*

ITS SPACER 1
GOLD

ITS SPACER 1
SILVER

SPACER 2

MATERIAL : Steel | *Acier*

DIMENSIONS : 50 x Ø 126 mm

FINISHES : Gold or Silver | *Or ou Argent*

Essential accessory for a composition by superposition of 2 or more ITS Wall Lamps | *Accessoire indispensable pour une composition par superposition de 2 ou plus ITS Wall Lamps*

ITS SPACER 2
GOLD

ITS SPACER 2
SILVER

CANOPY MULTI / *CLUSTER SUSPENSIONS KITS FOR ITS*

MATERIAL : Steel | *Acier*

DIMENSIONS : Ø 400 x 40 mm

FINISHES : Gold or Silver | *Or ou Argent*

Essential accessory for 4 ITS Pendants cluster | *Accessoire indispensable pour une composition de 4 ITS Pendants*

ITS CANOPY
GOLD

ITS CANOPY
SILVER