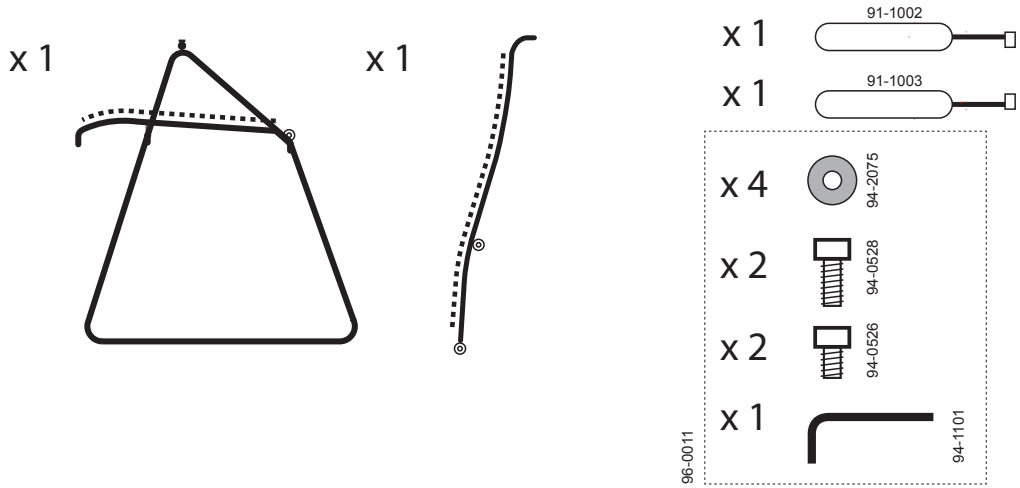

AI 97-1800-v4

1

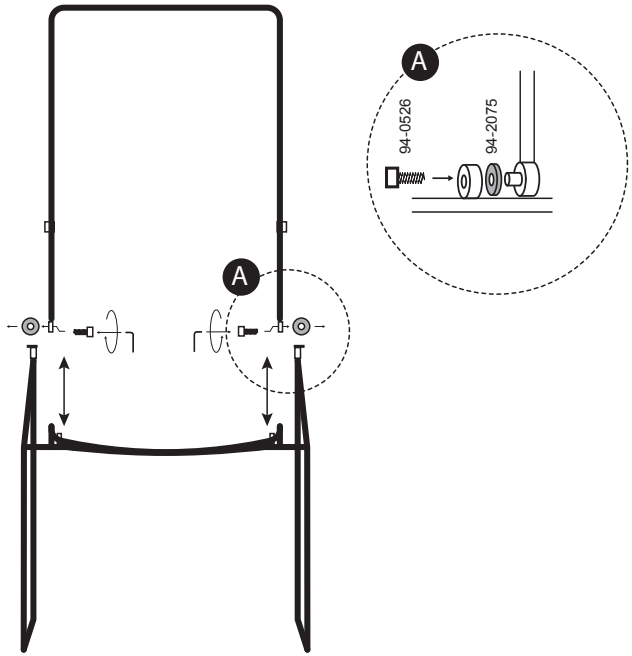

2

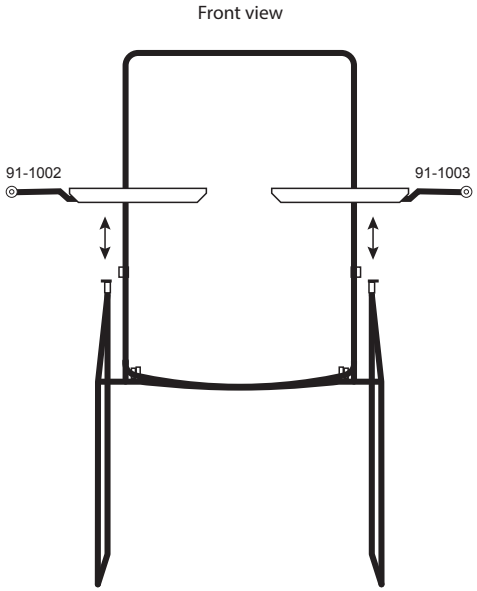

3

Lift each armrest a bit, then turn 90°, so the bracket aligns with the bracket on the back

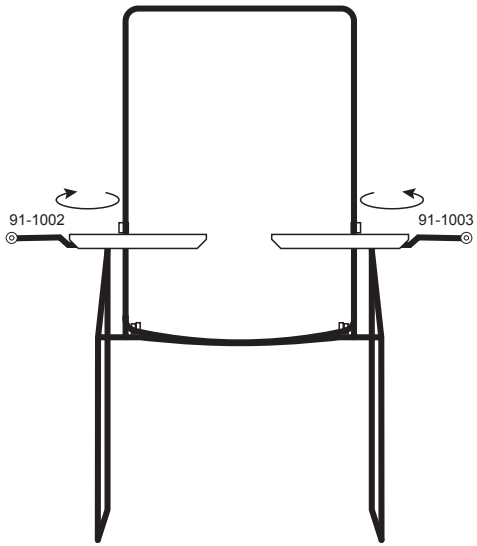

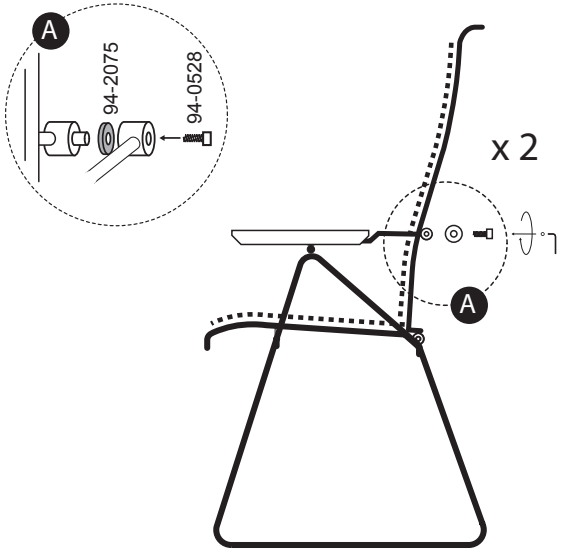

Bamboo treatment
The bamboo armrests on your chair are treated with a special impregnation from the factory, which is drawn into the bamboo. To keep the chair nice, it is necessary to treat the bamboo on a regularly base with oil suitable for bamboo. We recommend you to oil the armrests before taking it into use, and again after approx. 4 weeks, then as needed (3 – 4 times a year).

Fungi can attack all wooden furniture that is placed outside. Once fungi have attacked the bamboo it is be possible to clean it by sanding the bamboo down with sand paper and oil it again.
It is very important that you do not oil the bamboo if there is the slightest sign of infestation of fungi. Oiling at this stage will worsen the problem.

We recommend oil suitable for outdoor bamboo furniture including fungicide. Fungicide is an anti-fungal agent.

For daily cleaning is recommended only hot water, as soapy water dissolves the oil.
Outside the season, store in a dry and ventilated room. Do not cover the bamboo, as bamboo is a natural material that needs air to avoid that fungi and mold will spread into the material.

Plastic lamellas
For cleaning please use a wet cloth or a soft brush. If necesary, dish soap can be added to the cleaning water. Do not use any kind of chemicals for cleaning.

Powder coated metal parts
For cleaning please use a wet cloth or a soft brush. Do not use any kind of chemicals for cleaning.

Click
Position chair

Design by
Henrik Pedersen for
HOUE

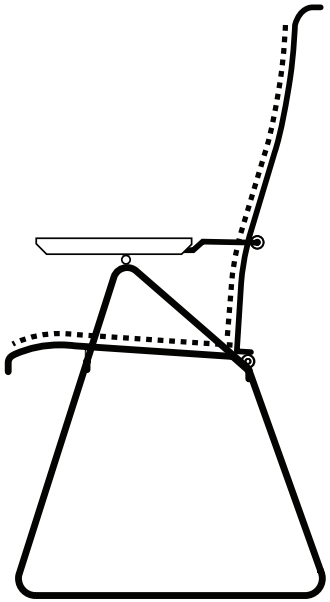

Assembly instructions

Screws and tools are included

AI 97-1800-v4