BY APPOINTMENT TO
THE ROYAL DANISH COURT

CARL HANSEN & SØN

PRODUCT DATA SHEET

MO330 PENDANT

MADS ODGÅRD

MO330 PENDANT

The MO Lighting Series is a collection of exquisitely minimalistic lamps designed to bring a sense of serenity and warmth - inspired by the comforting effect that light has on the human experience, especially during the dark days of winter. The Danish designer Mads Odgård chose to focus on two simple and familiar shapes: the hemisphere and the cylinder, forms with clear, logical connections to natural light.

SPECIFICATIONS

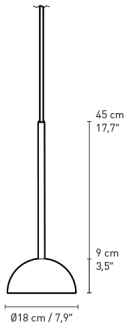

Bulb	Dimmable function	Cord	Suspension
Not included	None	2.5m black cord	Included

Recommended light source	Socket	Max watt	Voltage frequency	Electric shock protection	Ingress protection
Phillips LED: T25 1.7W E14, warm white	E14	15W	Max. 220-240V/50-60HZ	Class II	IP20

Packaging dimensions and weight	Height	Width	Length	Cbm	Net.	Tara	Gross	Cartons
	536 mm	296 mm	233 mm	0.04	0.8 kg	0.8 kg	1.6 kg	1/1

Preassembled
Yes

MATERIALS

Shade: White powder-coated steel Black powder-coated steel

RECOMMENDED LIGHT SOURCE USED FOR MEASSUREMENTS

Phillips LED

T25 1.7W E14 220-240V

Warm white

1.7W = 15W

150 lumen

2700K

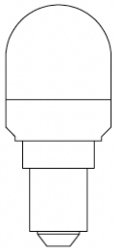

57 mm

POLAR

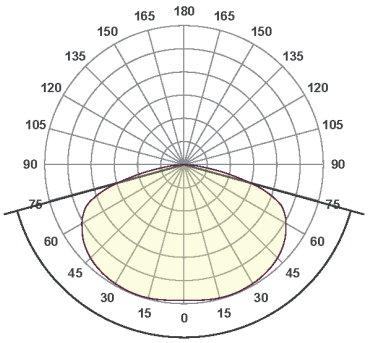

Beam angle **149,1°**

FOOTCANDLES

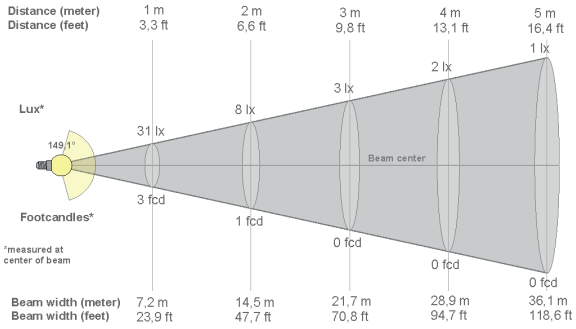

ISO-LUX

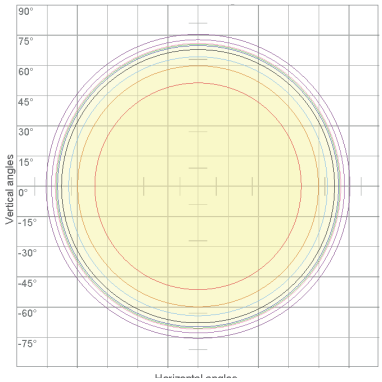

10% 3 cd
20% 6 cd
30% 9 cd
40% 12 cd
50% 16 cd
60% 19 cd
70% 22 cd
80% 25 cd
90% 28 cd

Conditions:
Number of c-planes: 40
Candela at center: 31 cd

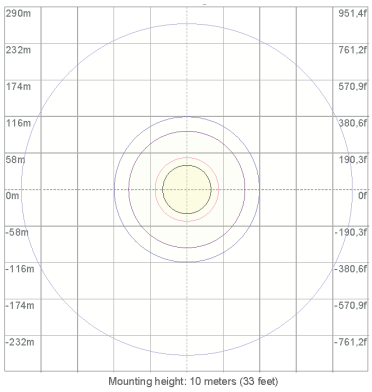

3% 9,37m lx
5% 15,6m lx
10% 31,2m lx
30% 93,7m lx
50% 0,156 lx

Conditions:
Number of c-planes: 40
Lux at center: 0,312 lx

Lux distribution on a surface when lamp is mounted at 10 meters from the surface.