HENNING KOPPEL

HK20 BUBI LAMP

ASSEMBLING INSTRUCTIONS

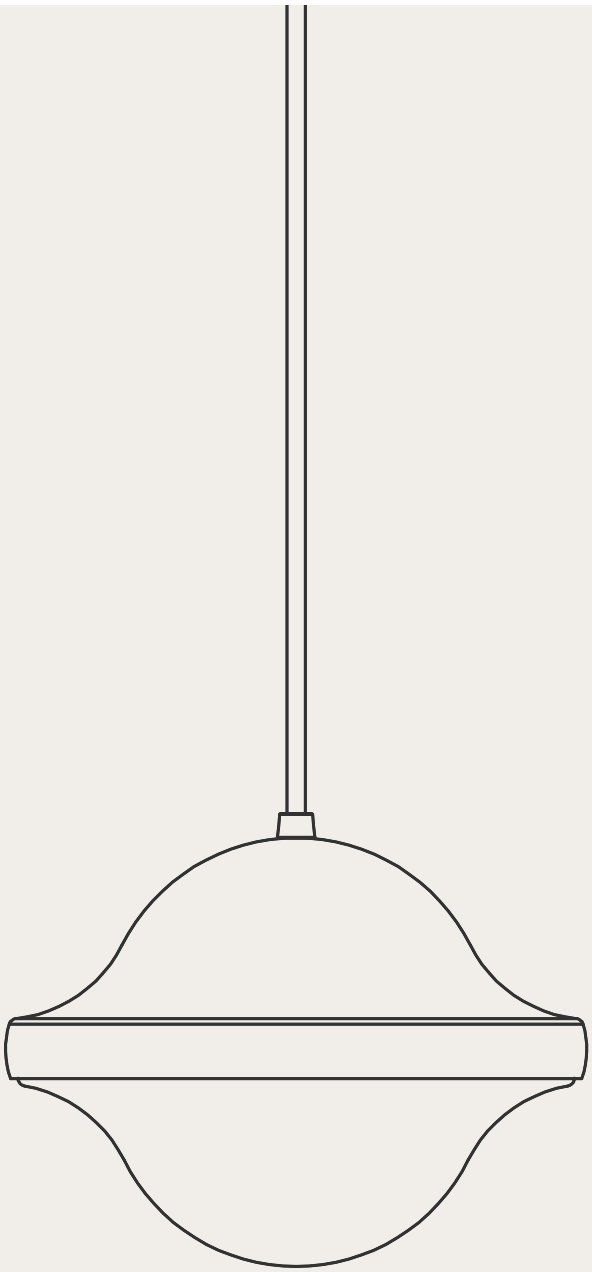

BY APPOINTMENT TO
THE ROYAL DANISH COURT

CARL HANSEN & SØN

DANSK

VIGTIGT

Sluk altid for strømmen, før installationen påbegyndes. I nogle lande må elektriske installationer kun udføres af en uddannet elektriker. Få oplysninger hos de relevante myndigheder.

Beskadiges den ydre, fleksible ledning eller kablet til dette armatur, skal det udskiftes af producenten, dennes service-repræsentant eller en person med tilsvarende kvalifikationer for at undgå farlige situationer.

ENGLISH

IMPORTANT

Always shut off power to the circuit before starting installation work. In some countries electrical installation work may only be carried out by a authorised electrical contractor. Contact your local electricity authority for advice.

If the outer, flexible cord or cable to this fixture is damaged, it must be replaced by the manufacturer, its service representative or a similarly qualified person in order to avoid dangerous situations.

	Lyskilde Light source	Spænding/frekvens Voltage/frequency	Vægt Weight	Isolationsklasse Electric shock protection	Tæthedsklasse Ingress protection
EU / UK	12W E27	Max. 220-240V/50-60Hz	0,87 kg	Class II	IP20

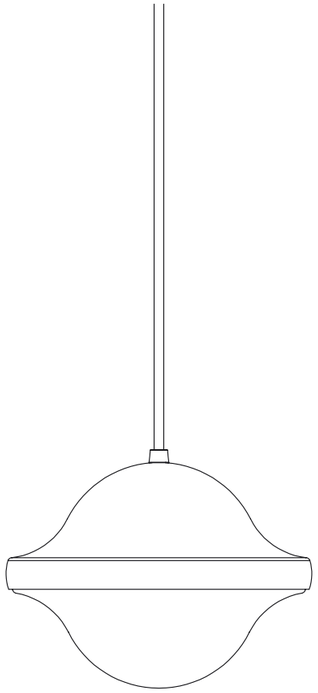

HENNING KOPPEL
HK20 BUBI LAMP

HENNING KOPPEL
HK20 BUBI LAMP

1A.

OPTION 1

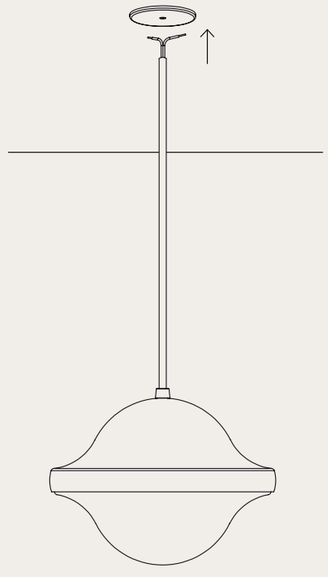

2A.

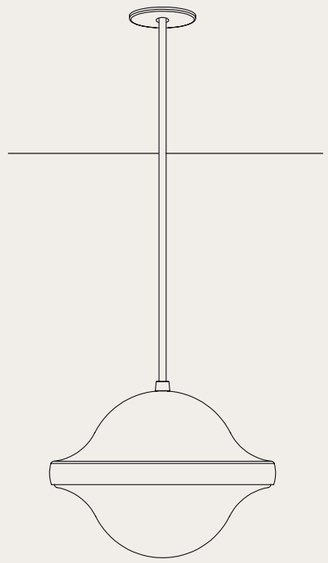

1B.

OPTION 2

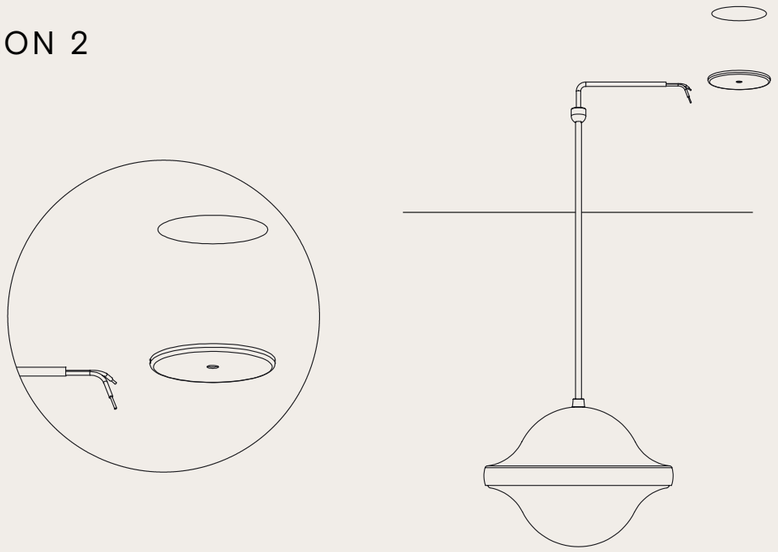

2B.

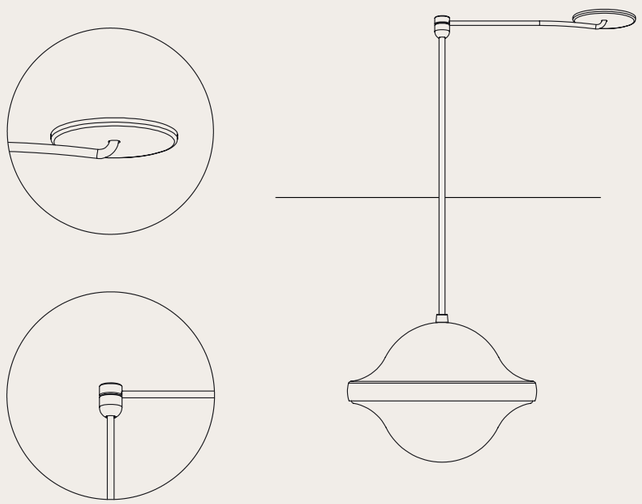

HENNING KOPPEL
HK20 BUBI LAMP

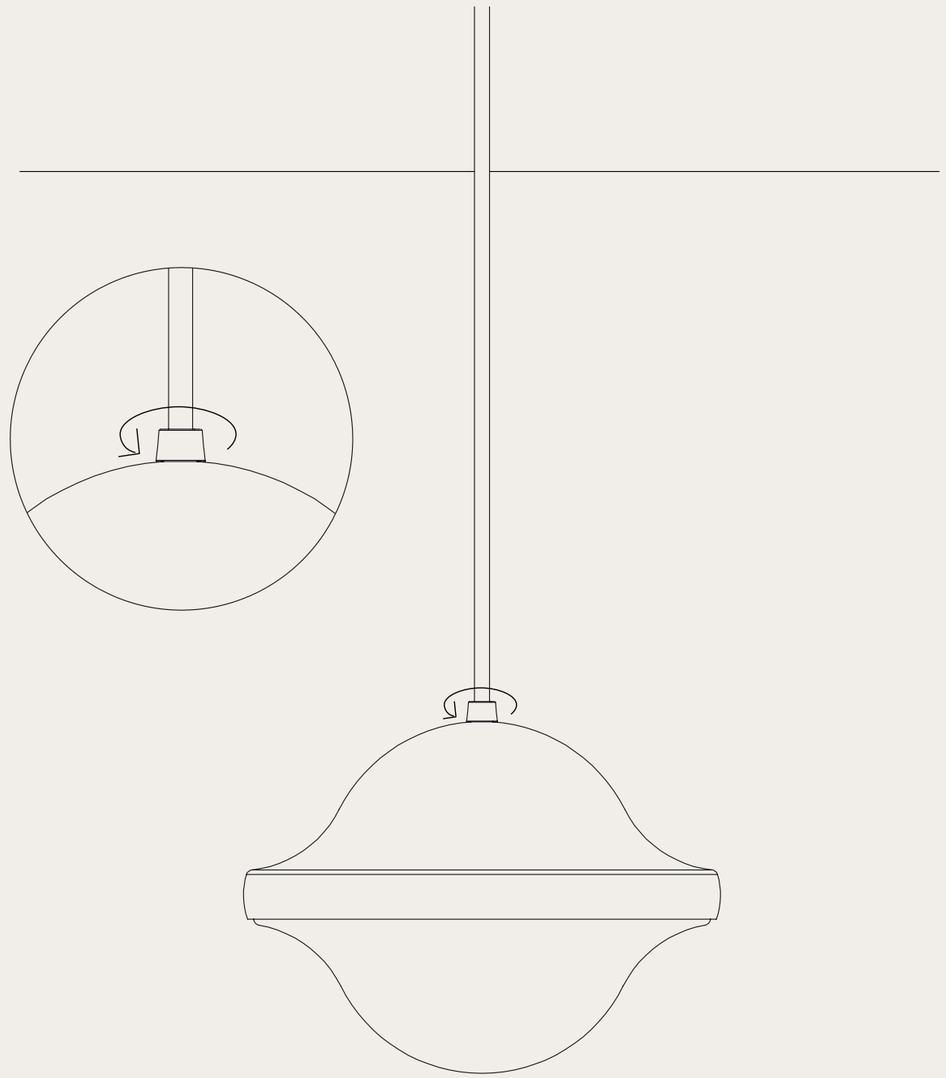

HENNING KOPPEL

HK20 BUBI LAMP

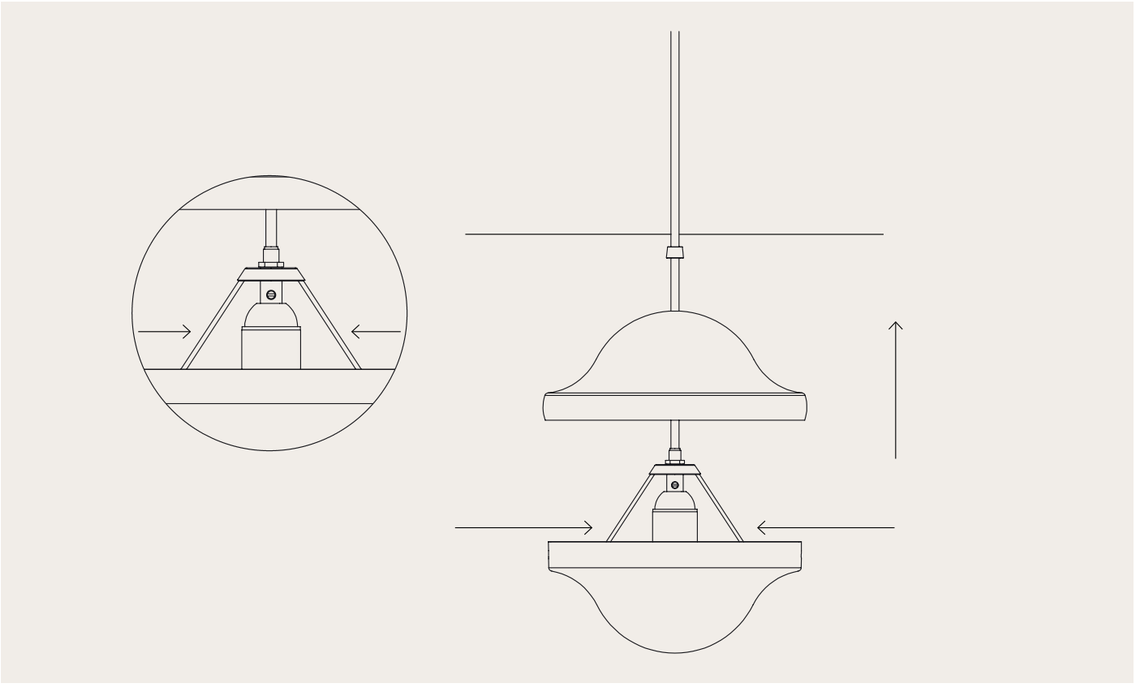

HENNING KOPPEL

HK20 BUBI LAMP

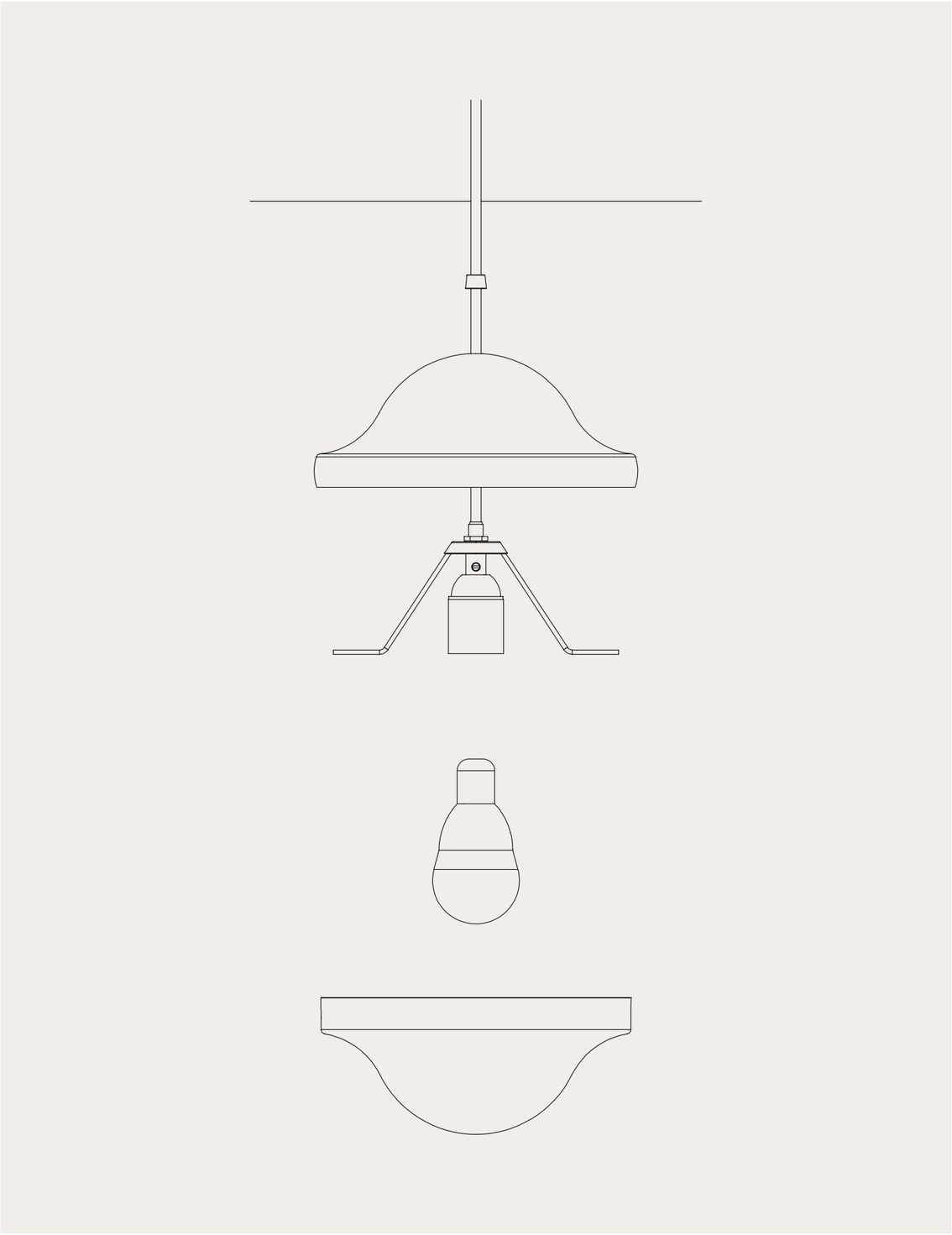

BY APPOINTMENT TO
THE ROYAL DANISH COURT

CARL HANSEN & SØN

IN1001