BY APPOINTMENT TO
THE ROYAL DANISH COURT

CARL HANSEN & SØN

PRODUCT DATA SHEET

BT1041 CALOT PENDANT

CLAUS BONDERUP & TORSTEN THORUP

BT1041 CALOT PENDANT

Originally created in the late 1960s, the BT Lighting Series was designed by Danish architects Claus Bonderup and Torsten Thorup. The three designs differ in size and shape but are united by their stylish simplicity and a common feature: a half-mirror light bulb peeking out from under the lamp shades. Revealing the light source in all the designs was a conscious choice for Bonderup and Thorup. As such, the sleek pendants acquire further visual appeal, while the half-mirror bulb reflects the light onto the white interior of the shades, creating indirect lighting.

SPECIFICATIONS

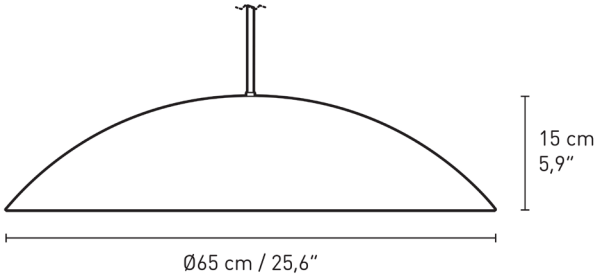

Bulb	Dimmable function	Cord	Suspension
Not included	None	3m black fabric cord: provided with shades in black, and polished brass 3m white fabric cord: provided with white shades	Included

Recommended light source	Socket	Max watt	Voltage frequency	Electric shock protection	Ingress protection
Phillips LED: E27, 7W, warm white	E27	15W	Max. 220-240V/50-60HZ	Class II	IP20

Packaging dimensions and weight	Height	Width	Length	Cbm	Net.	Tara	Gross	Cartons
	705 mm	705 mm	230 mm	0.11	4.40 kg	2 kg	6.40 kg	1/1

BT101 Diffuser	Preassembled
Sold seperately	Yes

MATERIALS

Shade: White powder-coated steel, Black powder-coated steel, Polished brass

RECOMMENDED LIGHT SOURCE USED FOR MEASSUREMENTS

Phillips LED

P45 4.3W E14 220-240V FR

Warm white

4,3W = 40W

470 lumen

2700K

80 mm

WITH BT101 DIFFUSER

POLAR

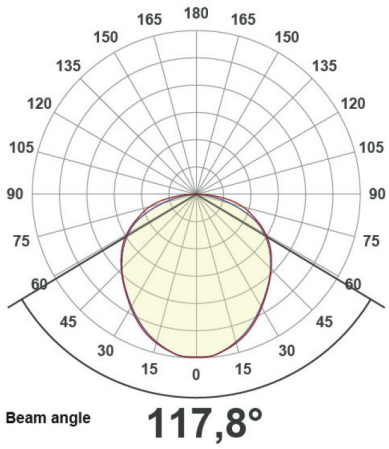

FOOTCANDLES

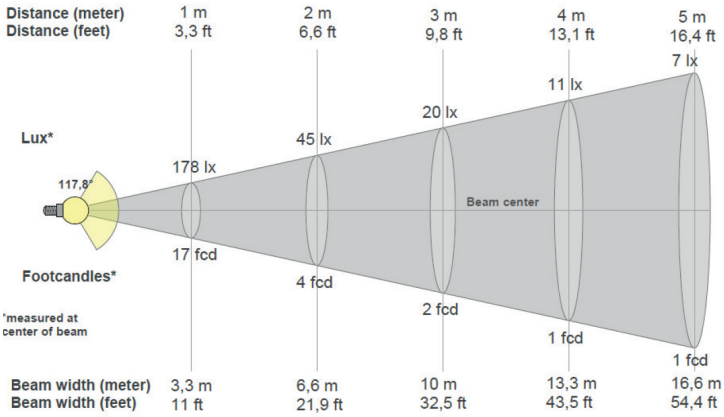

ISO-LUX

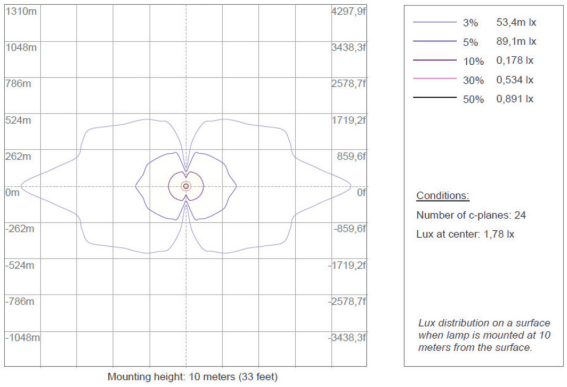

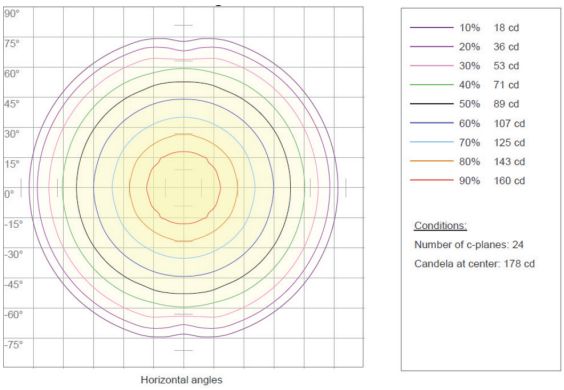

WITHOUT BT101 DIFFUSER

POLAR

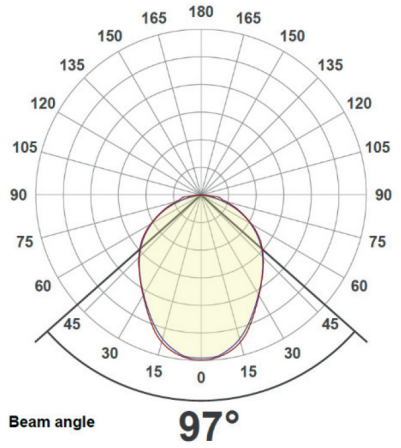

FOOTCANDLES

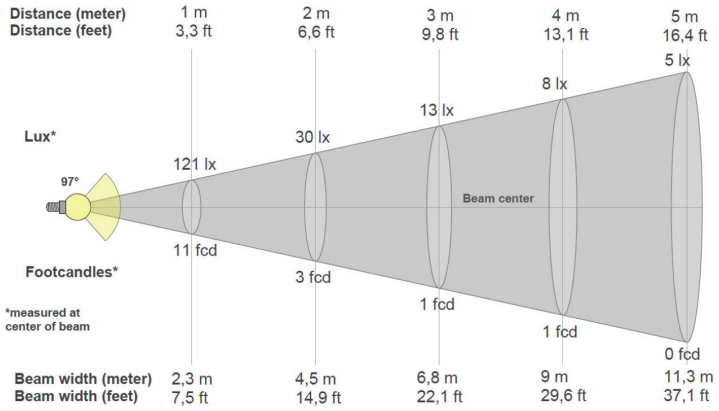
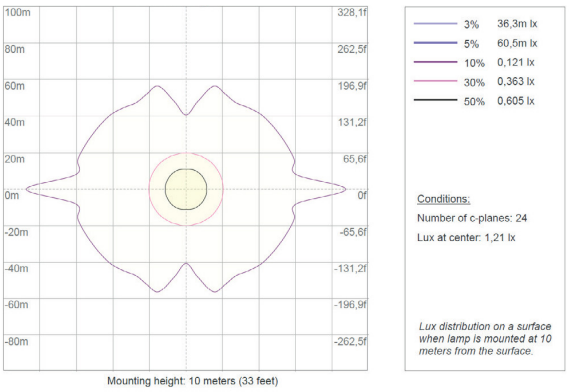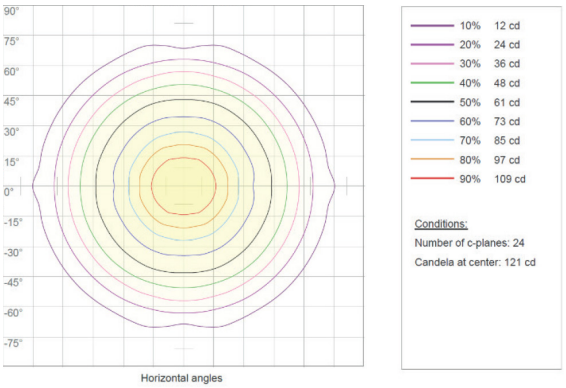
ISO-LUX