TORSTEN THORUP & CLAUS BONDERUP

BT1091, BT1001, BT1041

ASSEMBLING INSTRUCTIONS

CARL HANSEN & SØN

PASSIONATE CRAFTSMANSHIP

ENGLISH

IMPORTANT

Always shut off power to the circuit before starting installation work. In some countries electrical installation work may only be carried out by a authorised electrical contractor. Contact your local electricity authority for advice.

DANSK

VIGTIGT

Sluk altid for strømmen, før installationen påbegyndes. I nogle lande må elektriske installationer kun udføres af en uddannet elektriker. Få oplysninger hos de relevante myndigheder.

DEUTSCH

WICHTIG

Vor der Installation den Strom abschalten. In einigen Ländern dürfen Elektroinstallationen nur von autorisierten Elektrofachleuten ausgeführt werden. Im Zweifelsfall die örtlichen Behörden ansprechen.

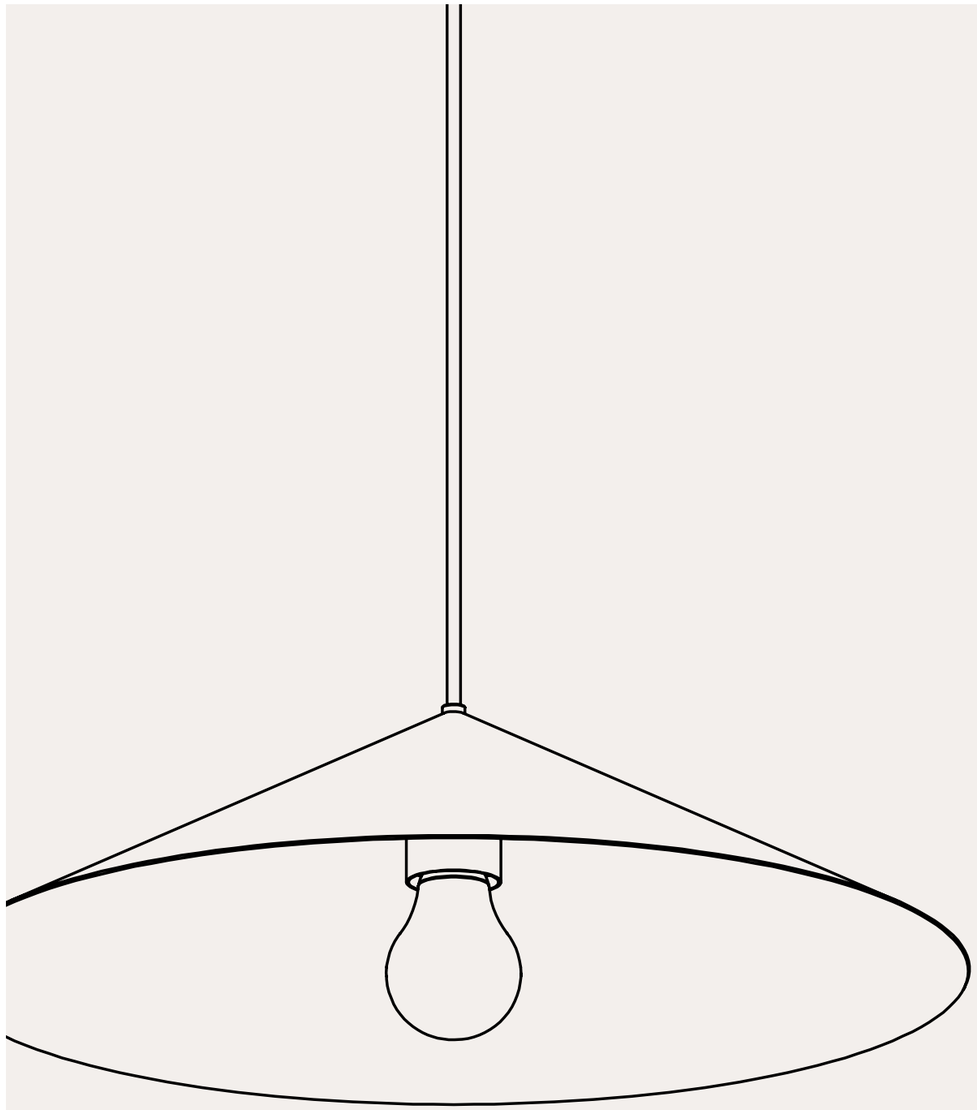

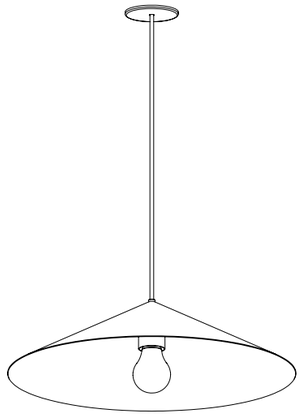

TORSTEN THORUP & CLAUS BONDERUP BT1091, BT1001, BT1041

1.

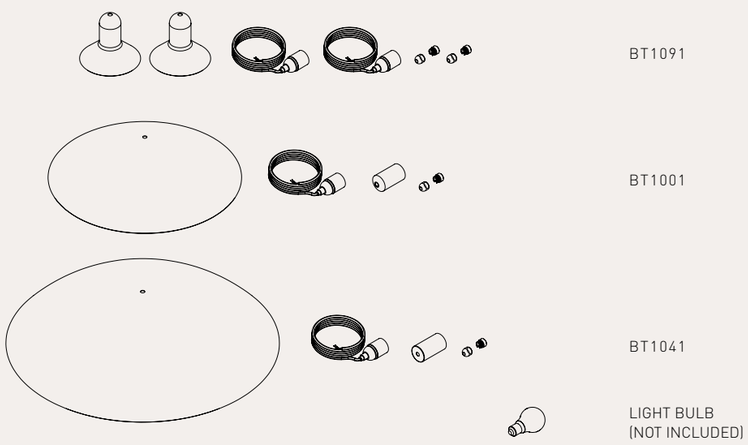

2.

BT1091
0,5 KG

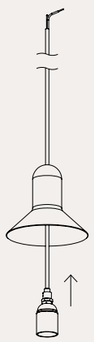

BT1001
2,1 KG

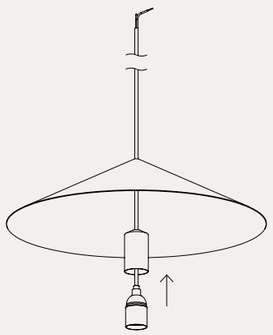

BT1041
4,3 KG

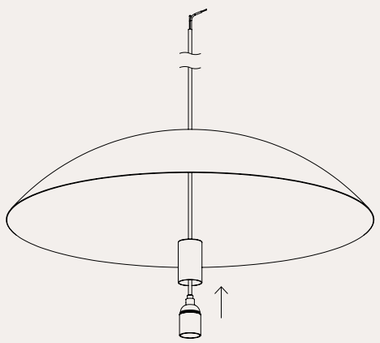

OPTION 1

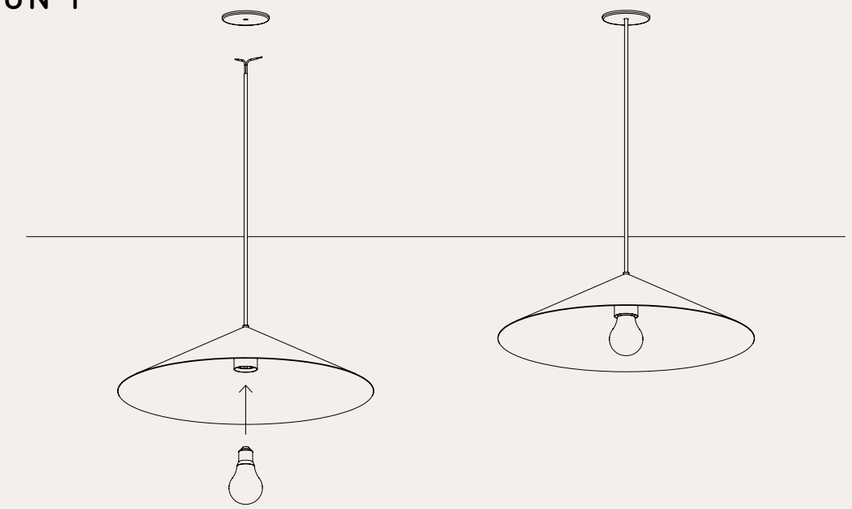

OPTION 2/1

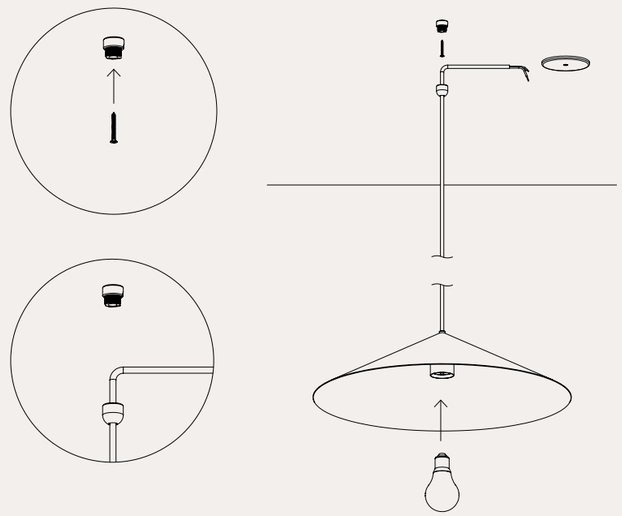

CARL HANSEN & SØN
PASSIONATE CRAFTSMANSHIP

TORSTEN THORUP & CLAUS BONDERUP

BT1091, BT1001, BT1041

OPTION 2/2

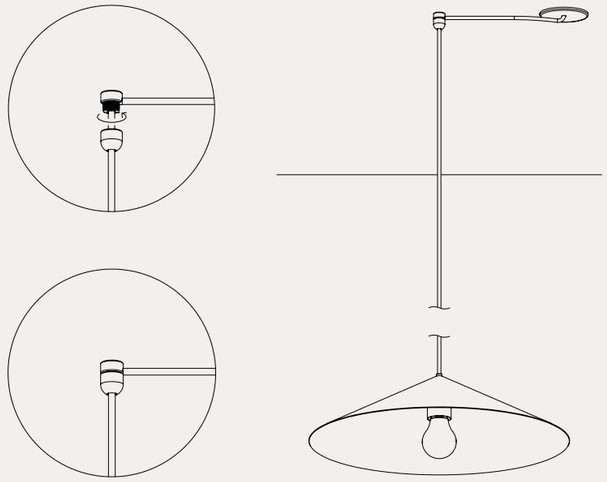

EVERY PIECE COMES WITH A STORY

When you choose a Carl Hansen & Søn product, you gain more than just a piece of furniture.

You become part of a proud tradition of distinctive and beautiful craftsmanship, where nothing has been left to chance. Where all furniture is manufactured with great love for design and the history of the crafting process. Where each piece passes through numerous expert hands before taking pride of place in your chosen space, recounting a story of masterful design in quality wood from sustainable forrests.

CARL HANSEN & SØN

PASSIONATE CRAFTSMANSHIP