Geometric Shade Collection : Circle

Origin: Produced in Denmark
Dimensions: Ø 400, Ø 250, Ø 150
Brass ring included, E27 fixture &
bulbs not included

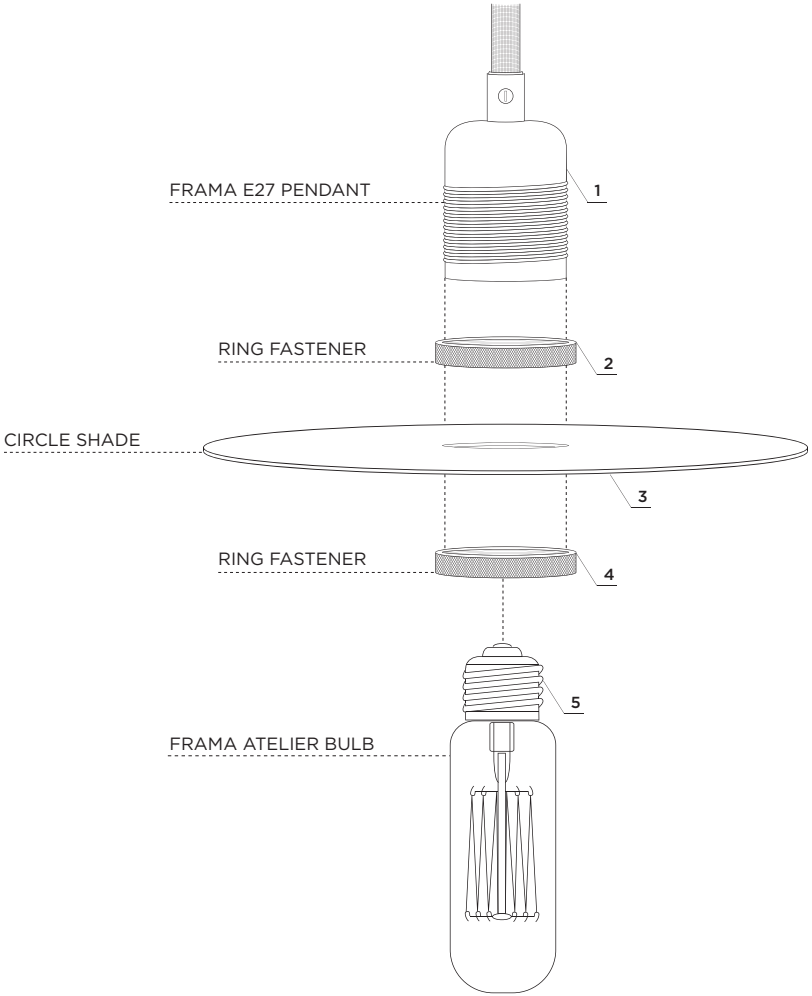

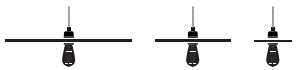

FRAMA

Geometric Shade Collection : Circle

Origin: Produced in Denmark
Dimensions: Ø 400, Ø 250, Ø 150
Brass ring included, E27 fixture &
bulbs not included

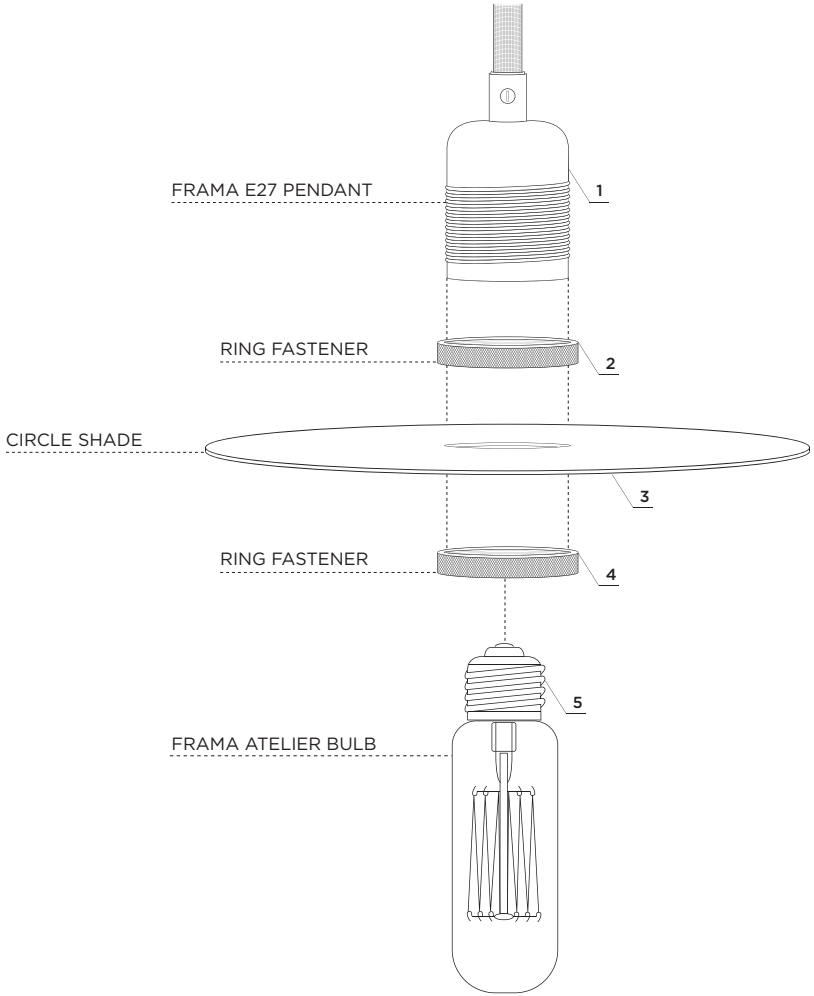

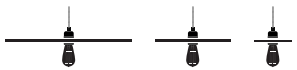

FRAMA

Geometric Shades Assembly & Maintenance

Individually cast to fit the Frama E27 pendants with the addition of a fitted ring to hold everything elegantly in place, these shades act as an addition to the Frama E27 pendant.

Contents:

In this box you will find:
- 1 Geometric Shade
- 2 Fitted rings for Frama E27 Pendant

Assembly:

1. Start by screwing the top ring on the Frama E27 Pendant (sold separately from shade)

2. Starting from the bottom of the pendant, place the shade against the top ring, screwing the bottom ring into place on the underside of the shade.

3. The rings should "sandwich" the Geometric Shade now. Tighten the rings so the Geometric Shade is secure.

4. Hang the light fixture where desired.

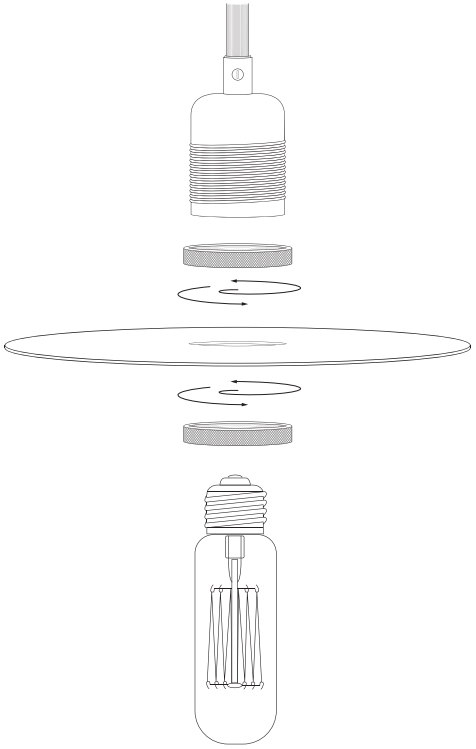

Maintenance:

Geometric Shades are treated for easy maintenance. For regular cleaning, dust shade regularly and wipe with a clean damp cloth.

Due to the thicker coating, the painted E27 Pendants may not be compatible with Geometric Shades. We recommend using the electroplated metal E27 pendants to ensure a smooth fit with the rings and Geometric Shades.

framacph.com

Geometric Shades Assembly & Maintenance

Individually cast to fit the Frama E27 pendants with the addition of a fitted ring to hold everything elegantly in place, these shades act as an addition to the Frama E27 pendant.

Contents:

In this box you will find:
- 1 Geometric Shade
- 2 Fitted rings for Frama E27 Pendant

Assembly:

1. Start by screwing the top ring on the Frama E27 Pendant (sold separately from shade)

2. Starting from the bottom of the pendant, place the shade against the top ring, screwing the bottom ring into place on the underside of the shade.

3. The rings should "sandwich" the Geometric Shade now. Tighten the rings so the Geometric Shade is secure.

4. Hang the light fixture where desired.

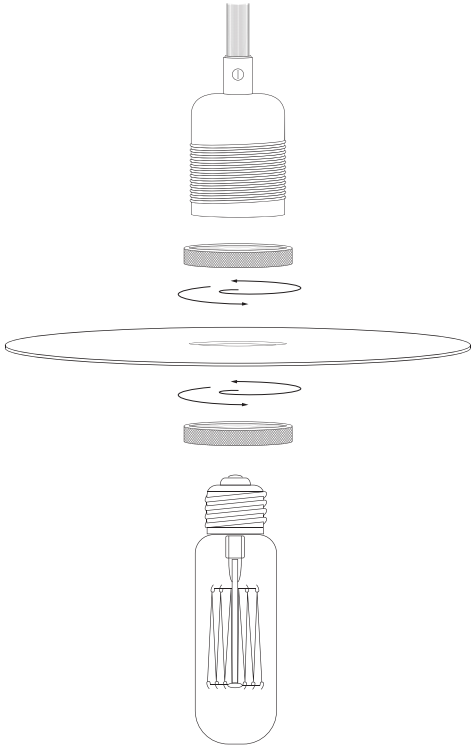

Maintenance:

Geometric Shades are treated for easy maintenance. For regular cleaning, dust shade regularly and wipe with a clean damp cloth.

Due to the thicker coating, the painted E27 Pendants may not be compatible with Geometric Shades. We recommend using the electroplated metal E27 pendants to ensure a smooth fit with the rings and Geometric Shades.

framacph.com