FORM & REFINE

Quatrefoil Table

Product Fact Sheet

Quatrefoil Table

No. (1260) Quatrefoil Table 68x68, Oak / No. (1261) Quatrefoil Table 68x68, White Oak

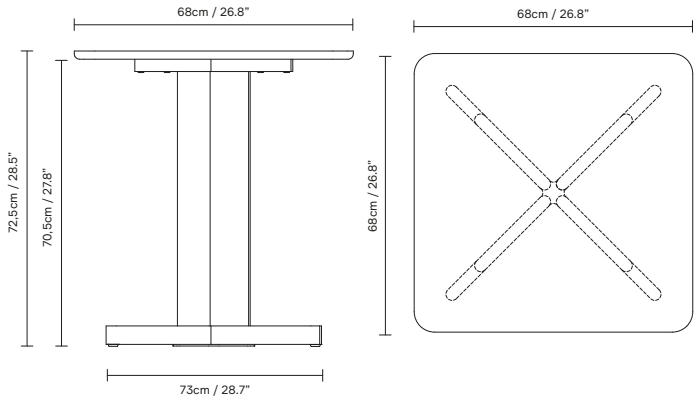

Dimensions:
H: 72,5 cm / 28.5”, W: 68 cm / 26.8”, L: 68 cm / 26.8”

Product description:
A center point of free-floating solid oak elements holds the squared table in place, creating a contradiction of lightness and substantiality. The free space of the four legs adds to the lightness and special visual complexity of the table. The centered legs make it possible to sit around the table in comfort with much more space for each user. It is made for all spaces whether domestic or hospitality.

Designer’s thoughts:
“The aim was to create and interesting shadow effect where four legs meet each other in a symmetric line. The four legs stand very close together and shape the characteristic construction of the table” – Herman Studio

Finish:

Natural oil treated

White oil treated

Made-to-order:
Non-standard configurations (special colors etc.) are available upon request at a minimum order quantity

Product type: Table

Environment: Indoor

Material: Solid European oak

Country of origin: Poland

Net weight: 16,5 kg / 36.3 lb

Designed by/year of design: Herman Studio, 2022

Pre-assembled: No, consist of four parts

Contract use: Yes

Scope of application: Café table, dining table

Certifications: FSC certified

Warranty: Form & Refine provides a five-year product warranty

Care guide: Link to download

Assembly Guide: Link to download

Additional resources: Link to image bank, 2D/3D files