Assembly instruction

KOMMO

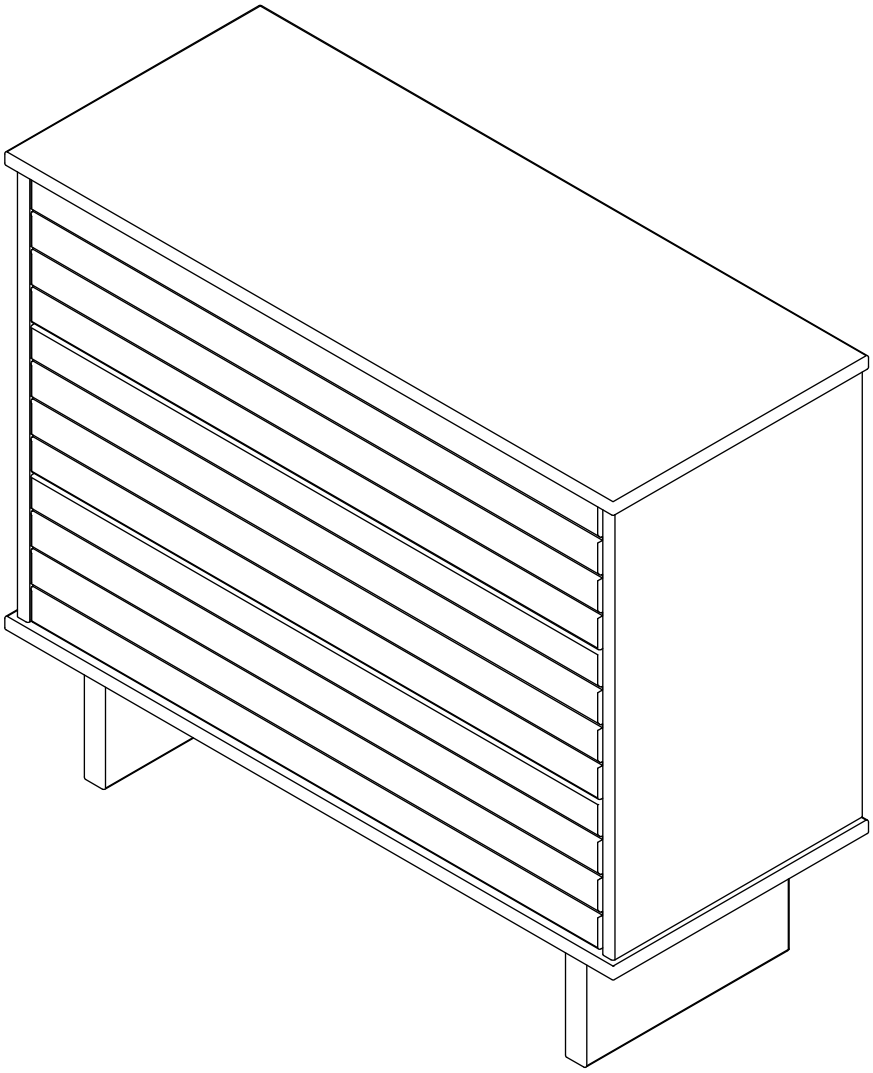

karup

DESIGN

karupdesign.com

Thank you for your purchase
Tak for din bestilling
Herzlichen Dank für Ihren Einkauf
Vă mulțumim pentru comandă
Merci de votre achat
Bedankt voor uw aankoop
Děkujeme vám za váš nákup
Grazie per il tuo acquisto
Gracias por su compra
Kiitos ostoksestasi
Takk for bestillingen din
Dziękujemy za zakup
Спасибо за покупку
Tack för ditt köp
ご購入ありがとうございます。
구매해 주셔서 감사합니다

FITTINGS

A X 42

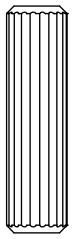

ø8 x
30mm

B X 2

ø7 x
70mm

C X 1

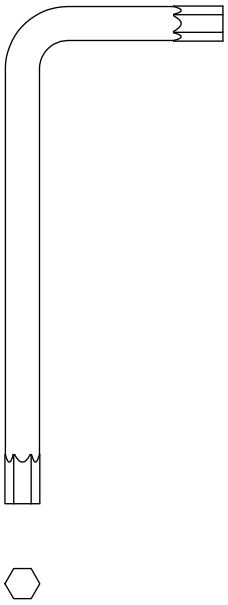

4 mm

D X 24

ø11mm

E X 12

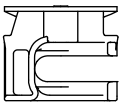

ø15 x
11mm

F X 17

ø6,2 x
50mm

G X 25

ø3,5 x

H X 1

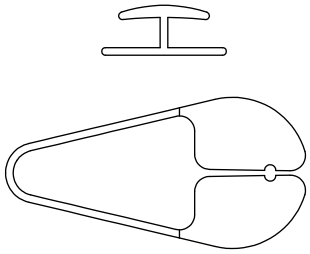

45 x 20 x
16mm

J X 18

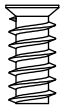

ø6,2x
13mm

K X 12

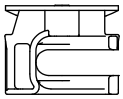

ø15 x
11,4 mm

L X 18

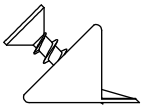

15 x 15 x
10mm

M X 1

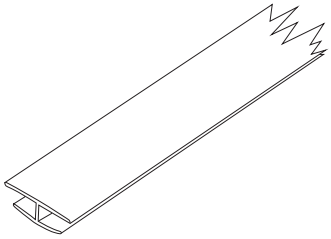

861 x 16,5 x
6mm

I X 3 LEFT

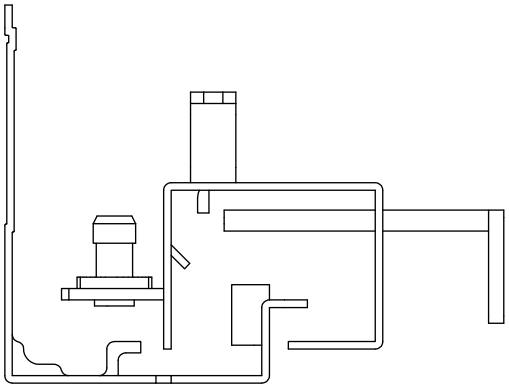

25 KG

I X 3 RIGHT

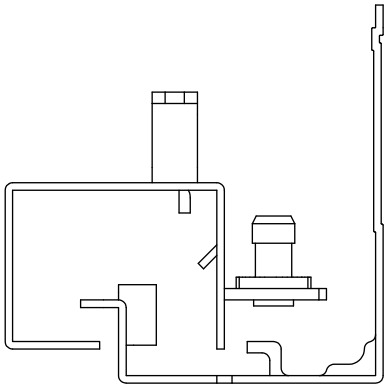

25 KG

*Safety strap incluced, find the instruction in the package

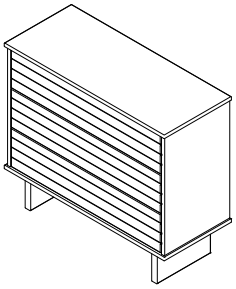

1 × 1	1 × 5	1 × 9	1 × 13
1 × 2	1 × 6	1 × 10	
1 × 3	1 × 7	1 × 11	
1 × 4	2 × 8	1 × 12	

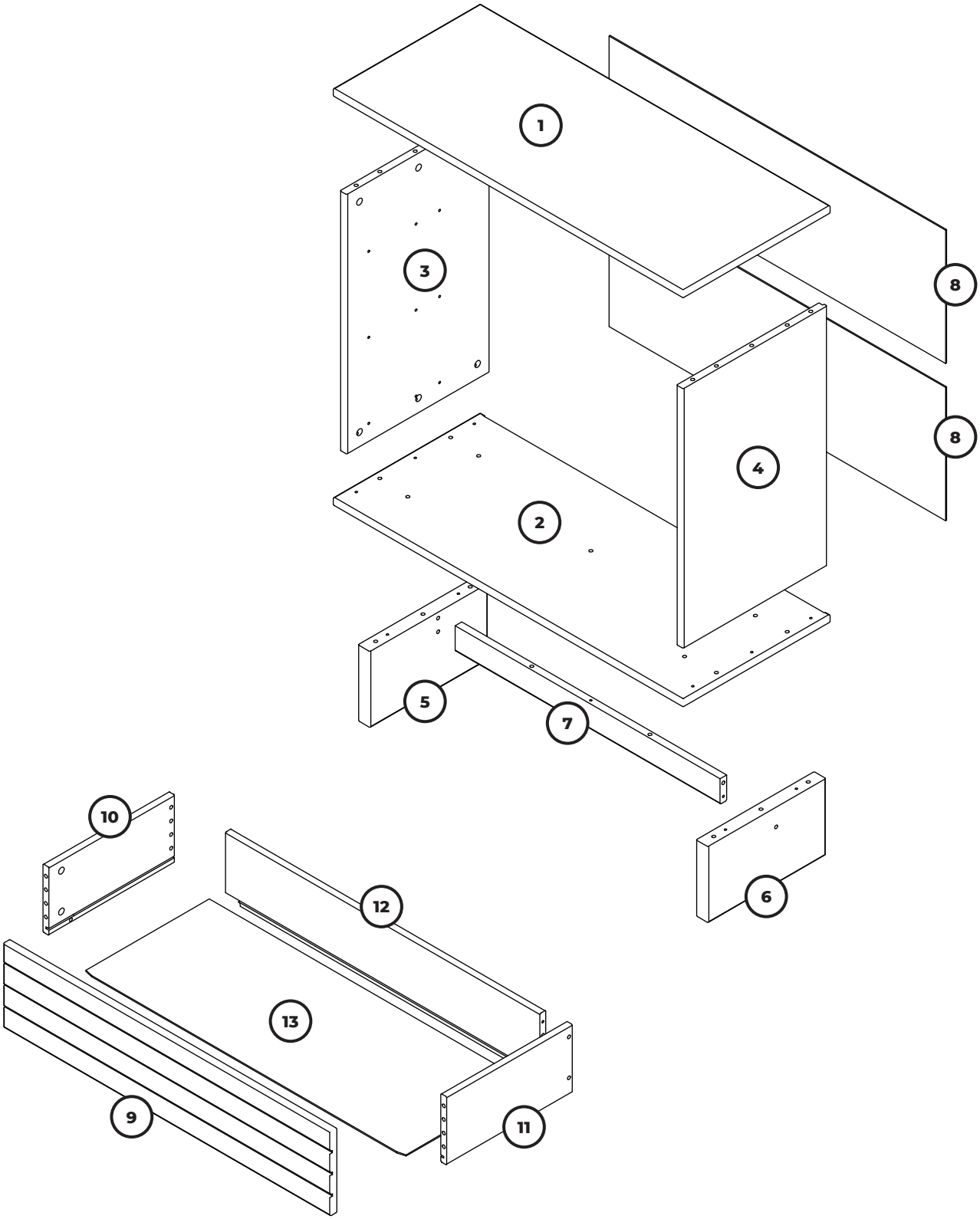

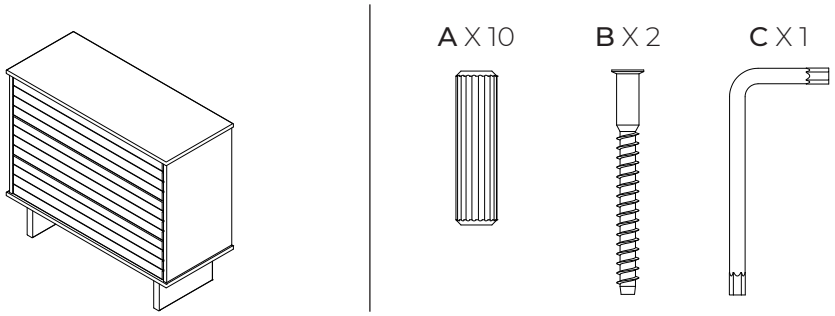
A X 10
B X 2
C X 1

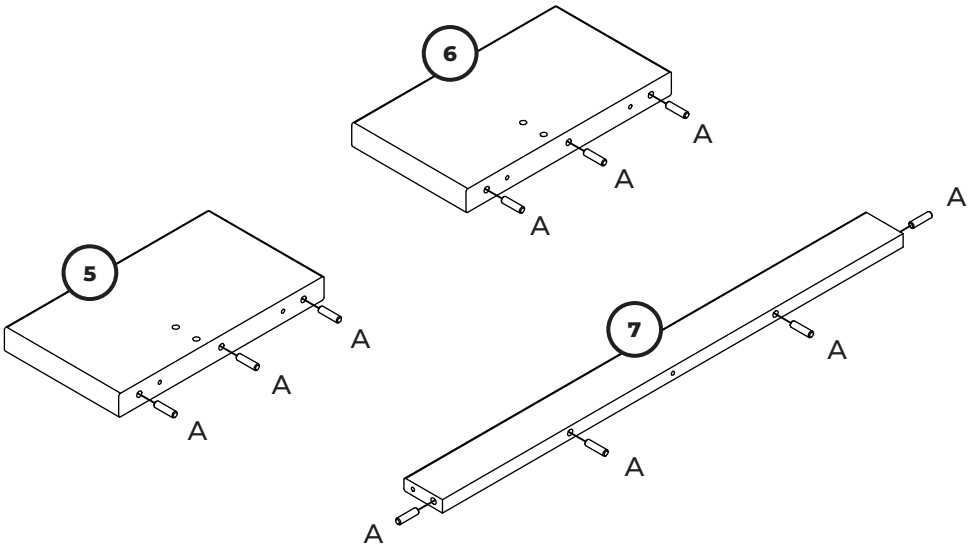
6
A
A
A
5
A
A
A
7
A
A
A
A

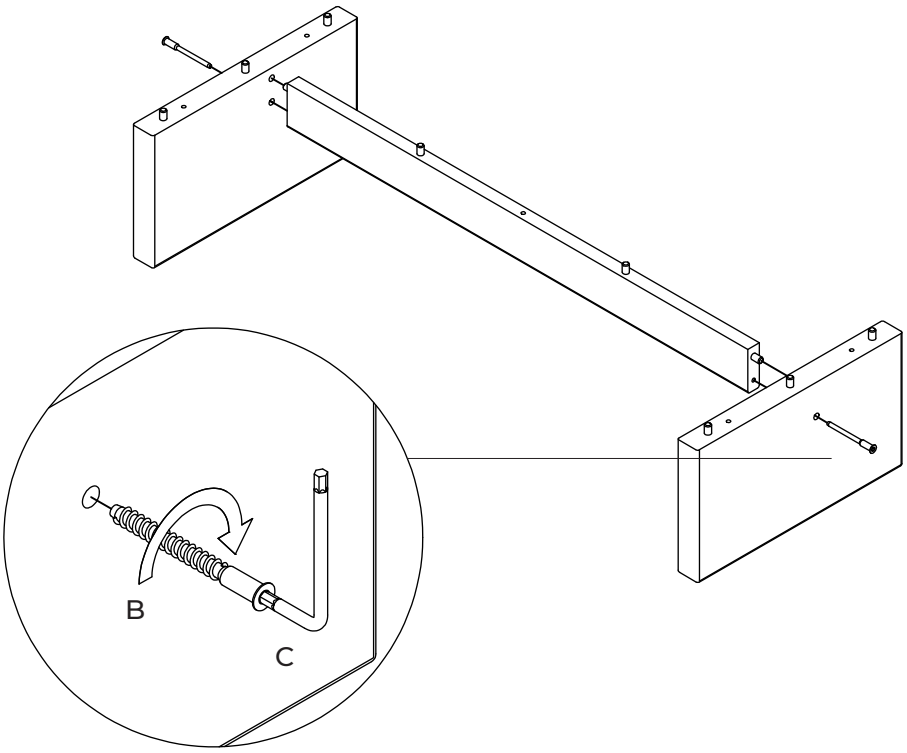
B
C

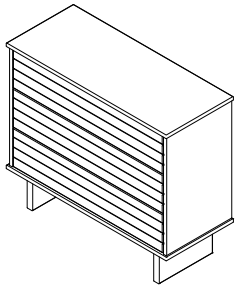

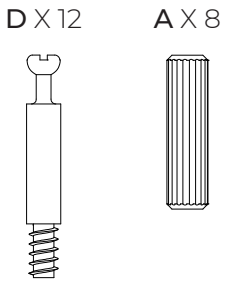
D X 12
A X 8

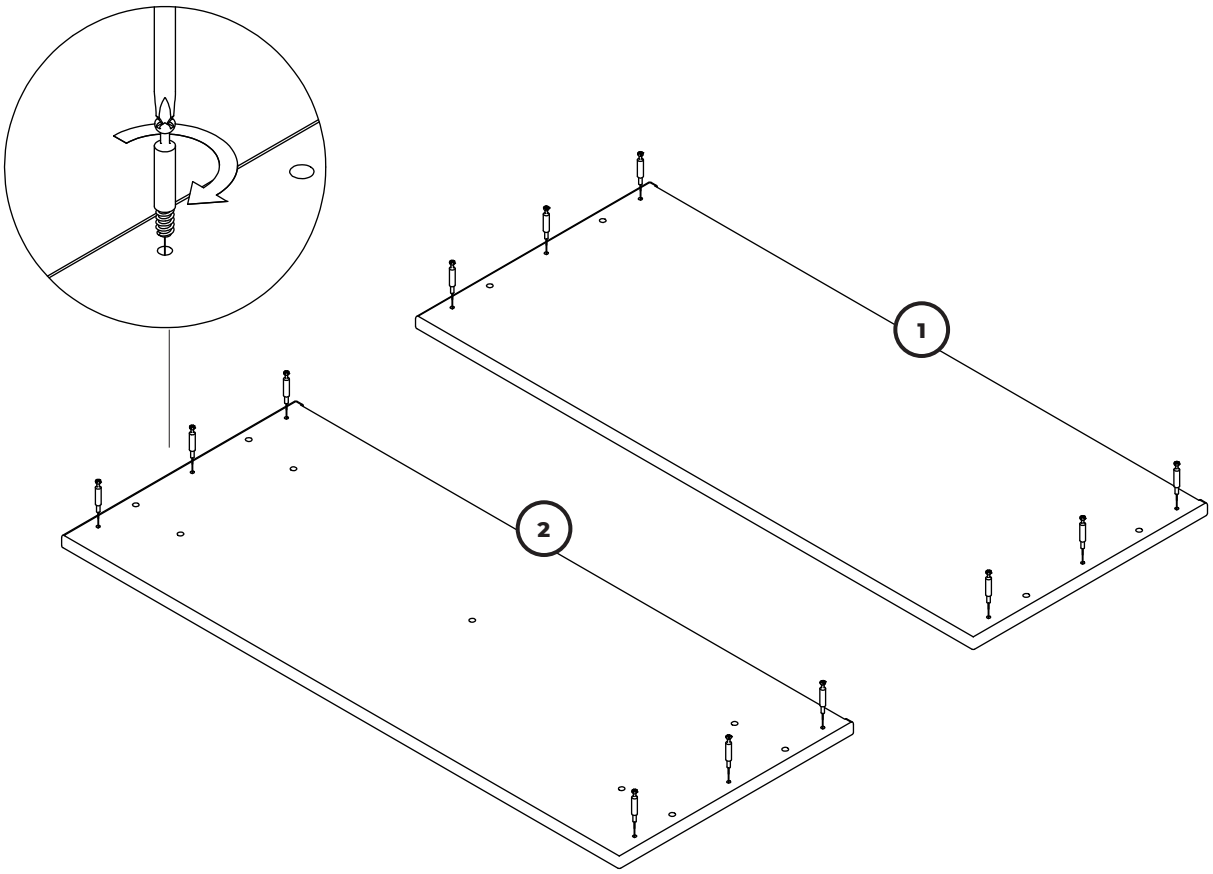
1
2

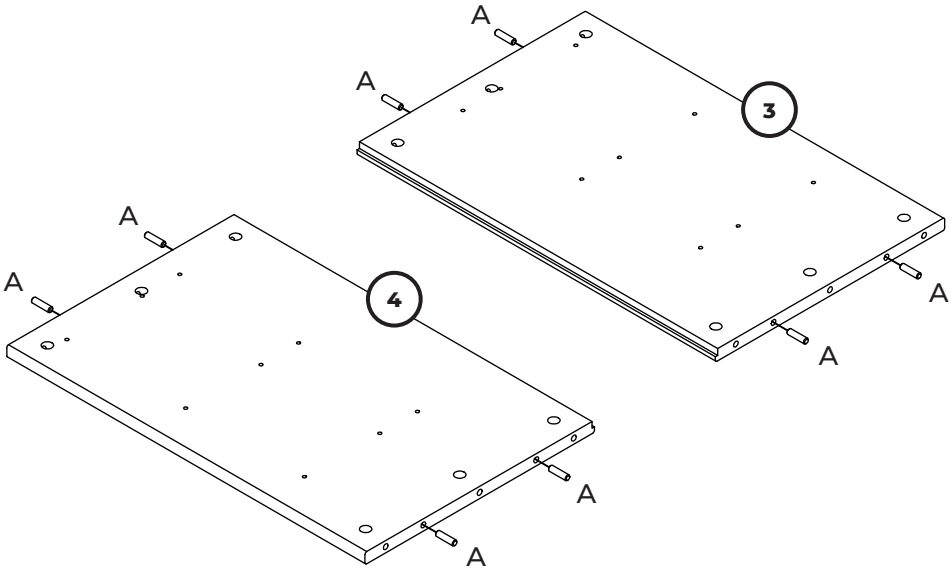
A
A
3
A
A
A
A
4
A
A

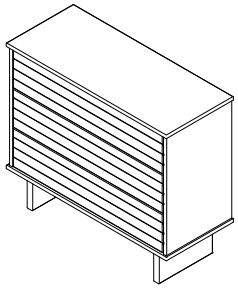

E X 12

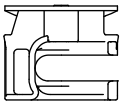

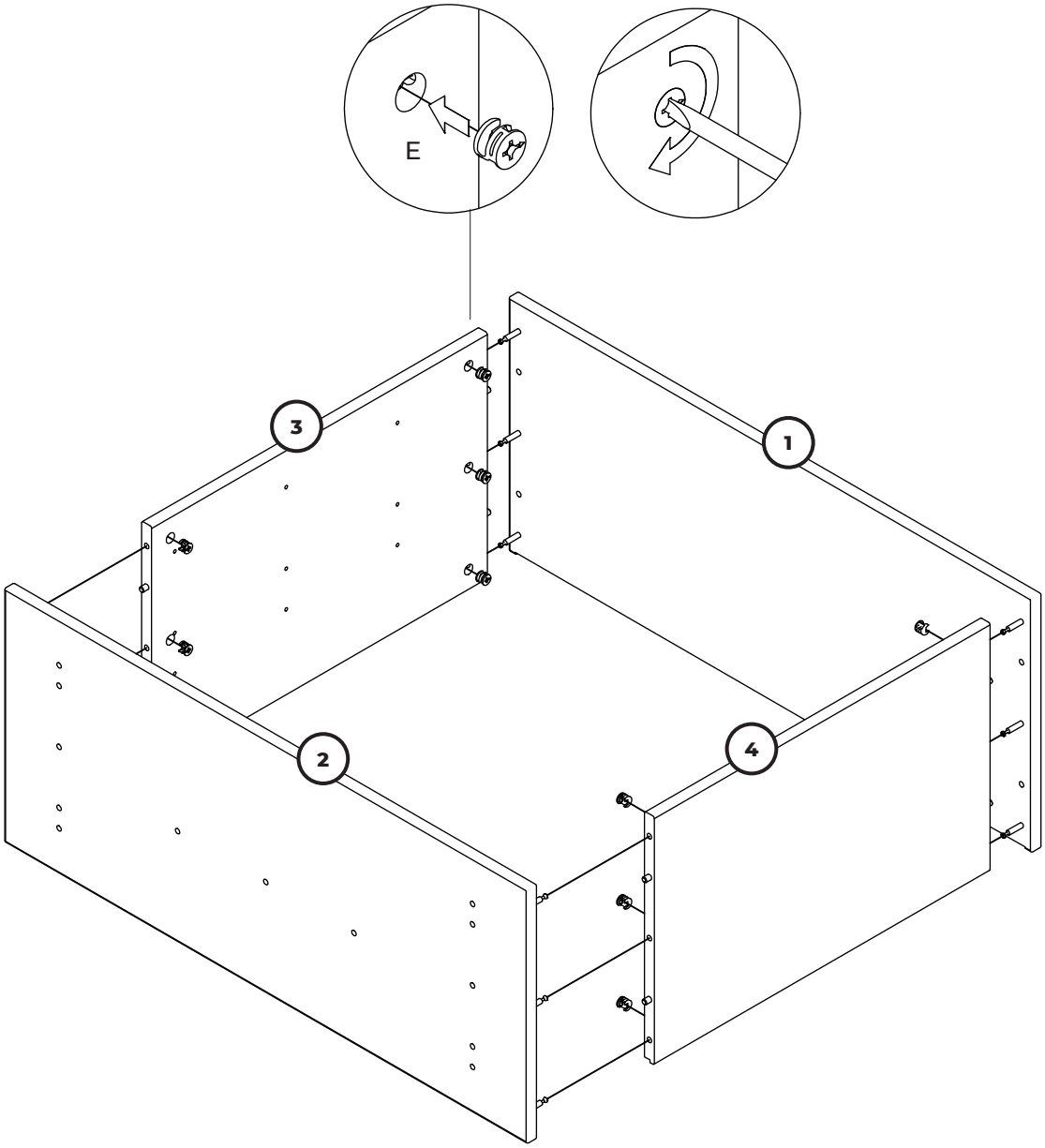

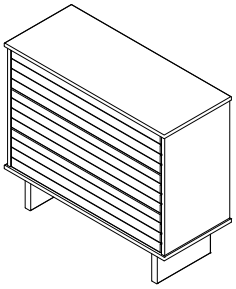

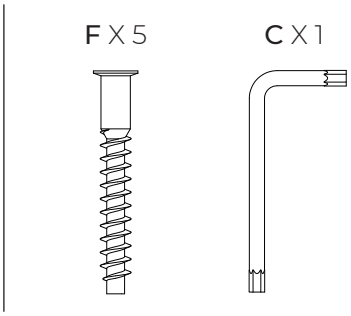
F X 5
C X 1

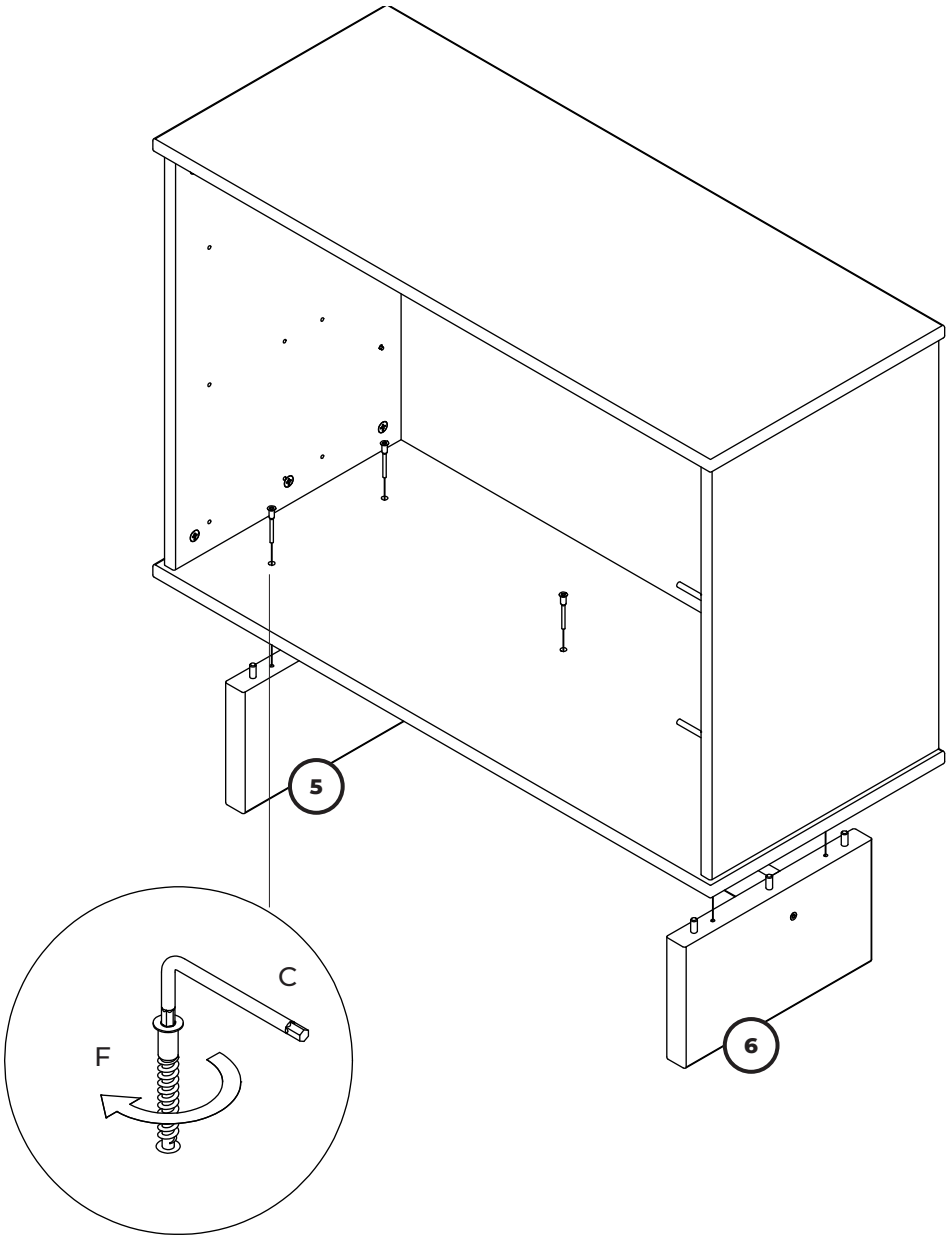
5
6
C
F

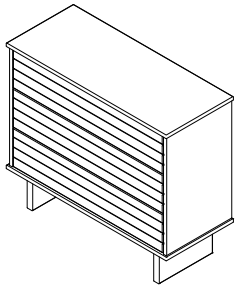

G X 25

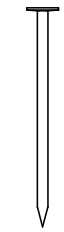

H X 1

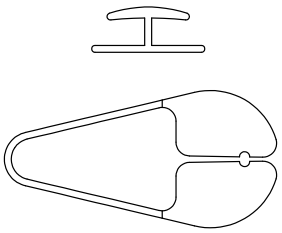

M X 1

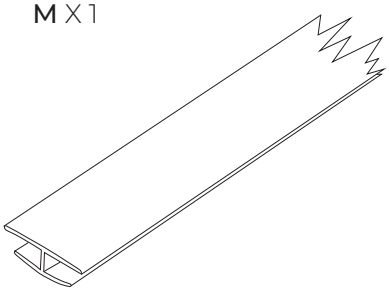

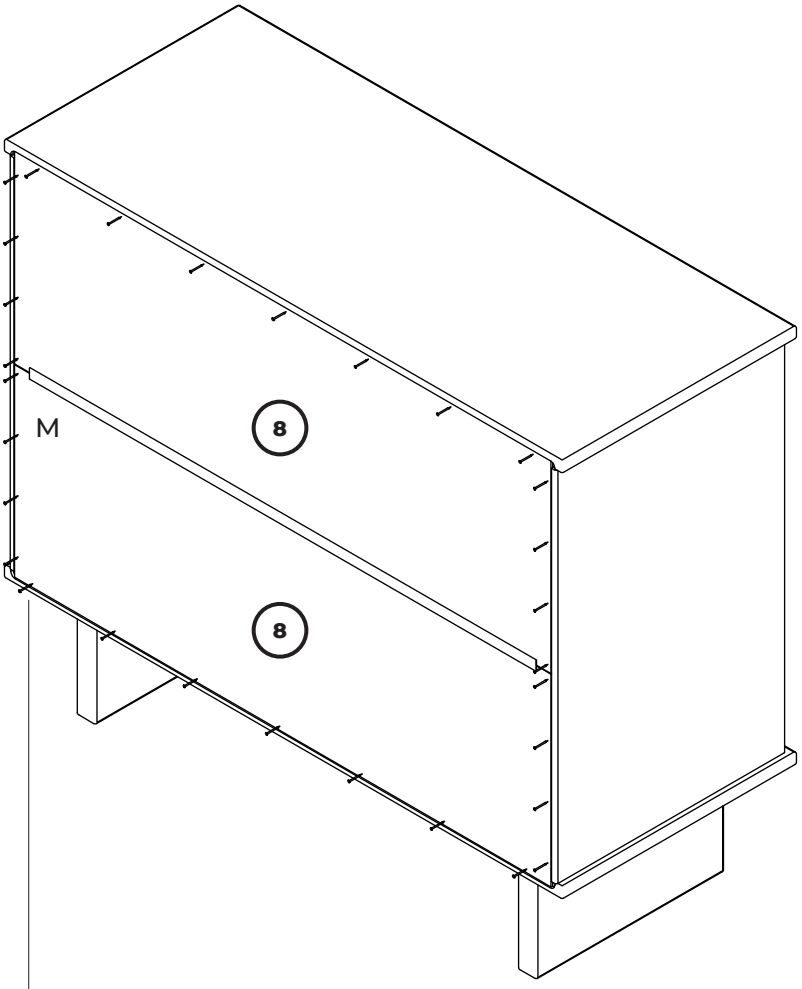

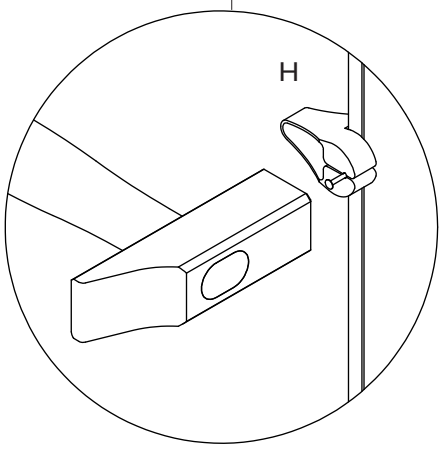

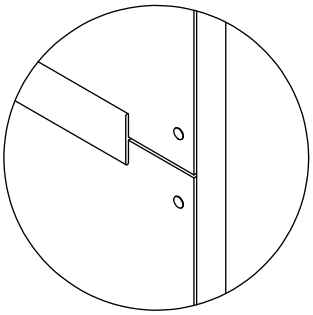

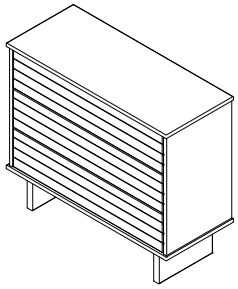

J X 18

I X 3 LEFT

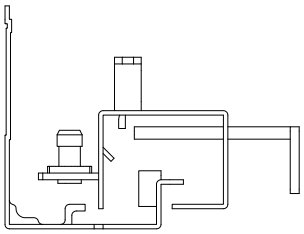

I X 3 RIGHT

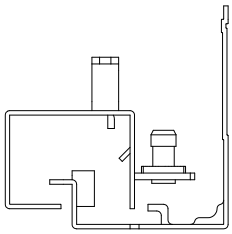

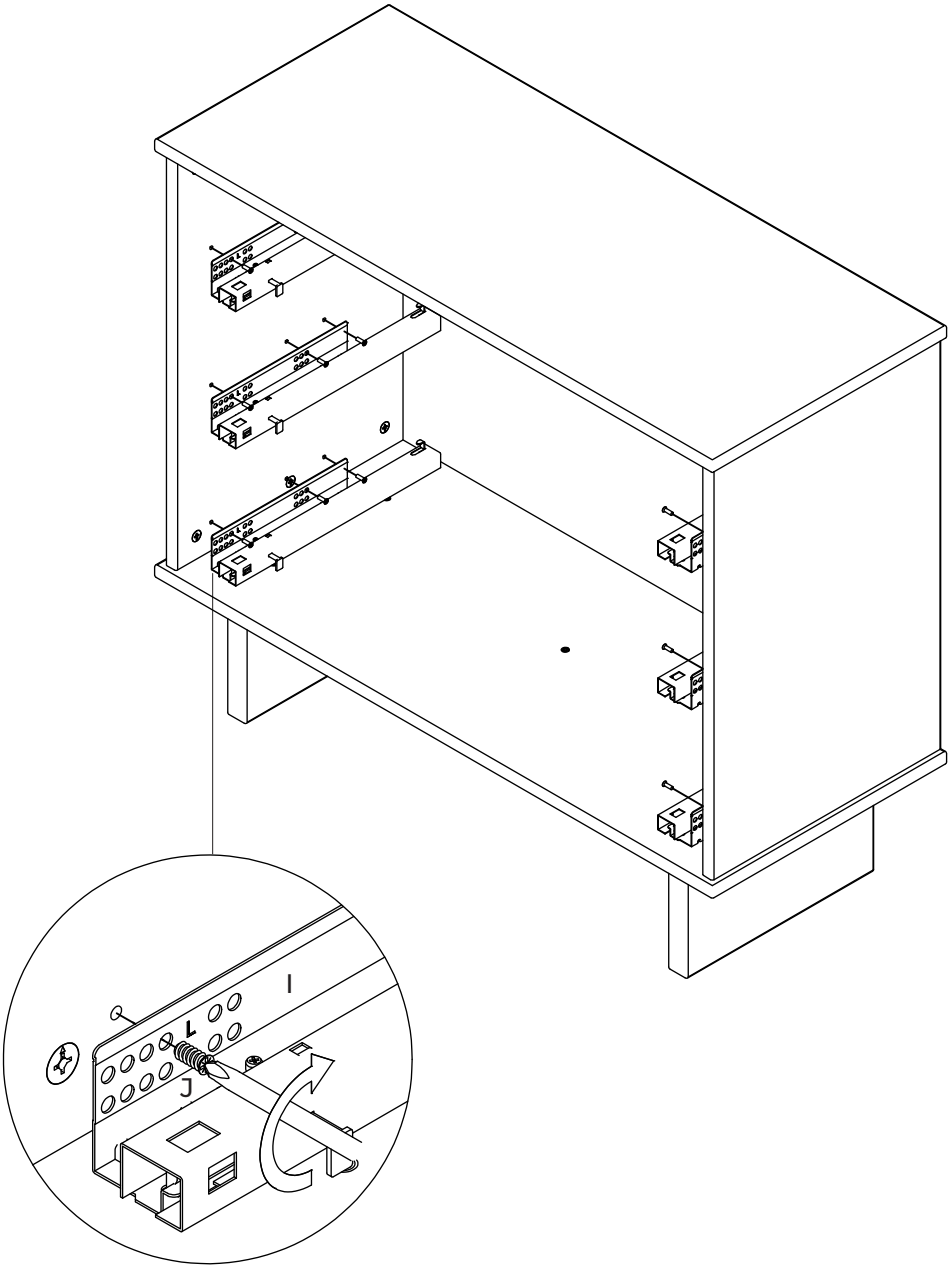

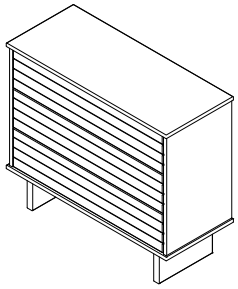

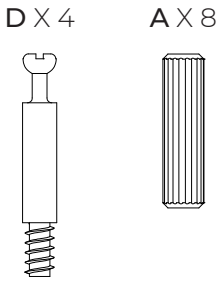
D X 4
A X 8

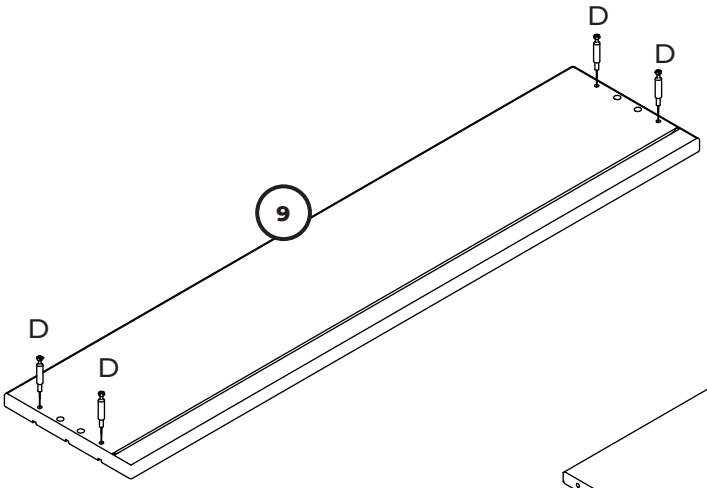
D
D
9
D
D

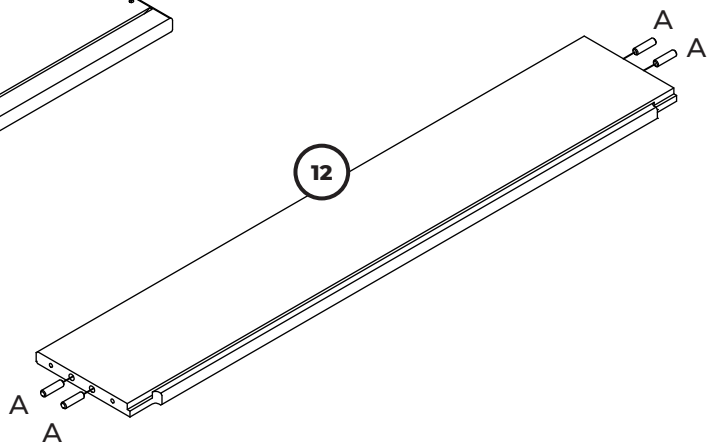
A
A
12
A
A

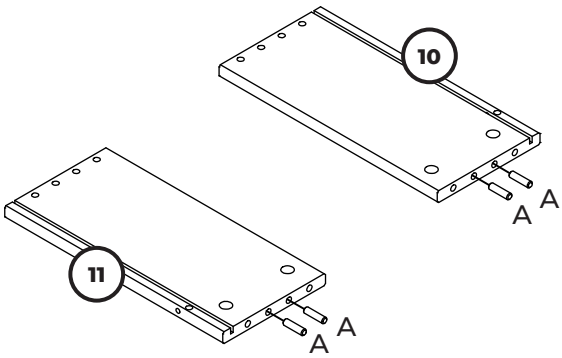
10
A
A
11
A
A

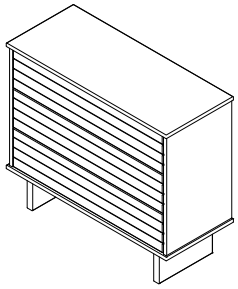

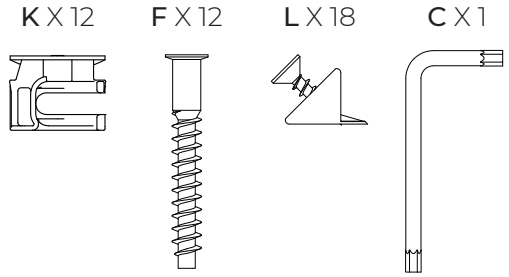
K X 12
F X 12
L X 18
C X 1

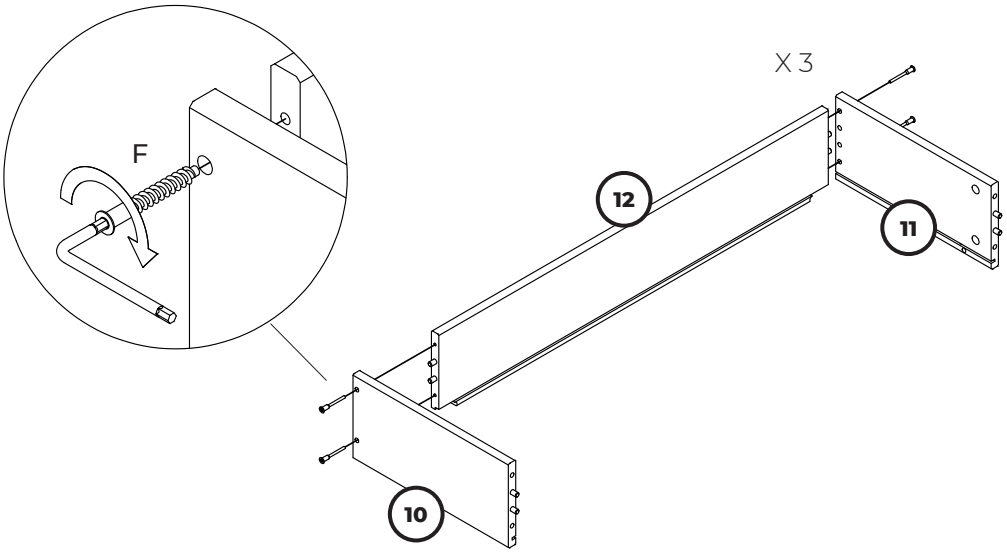
F
X 3
12
11
10

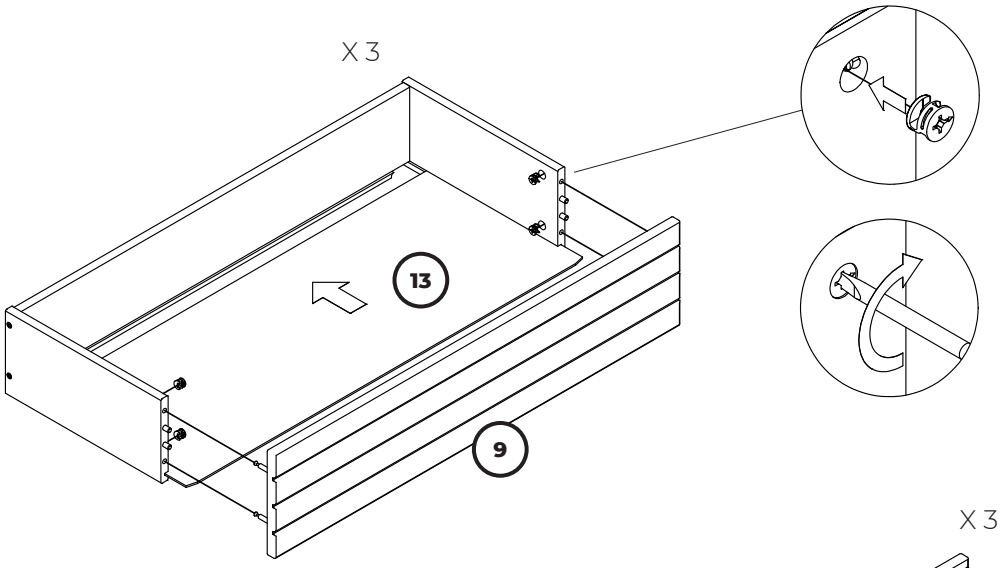
X 3
13
9

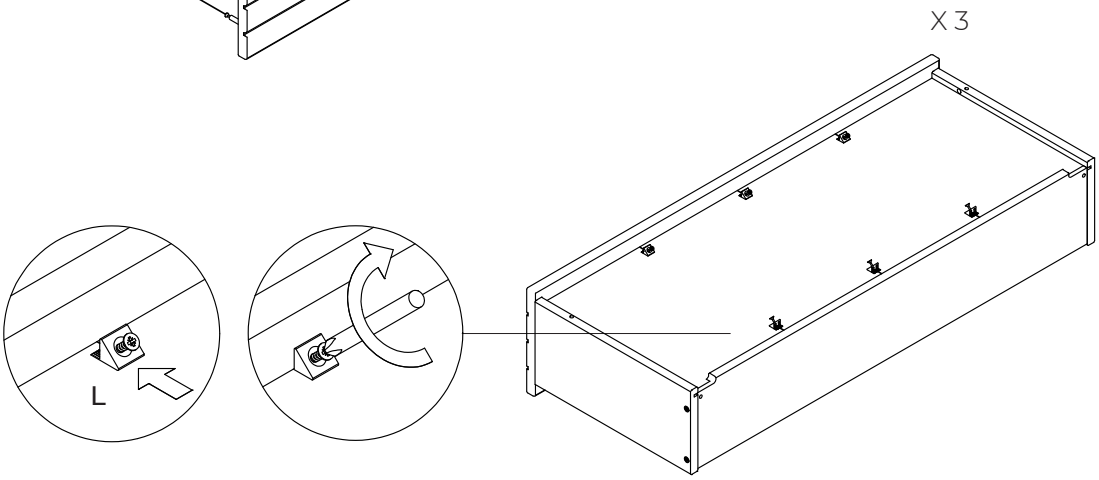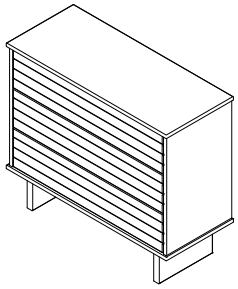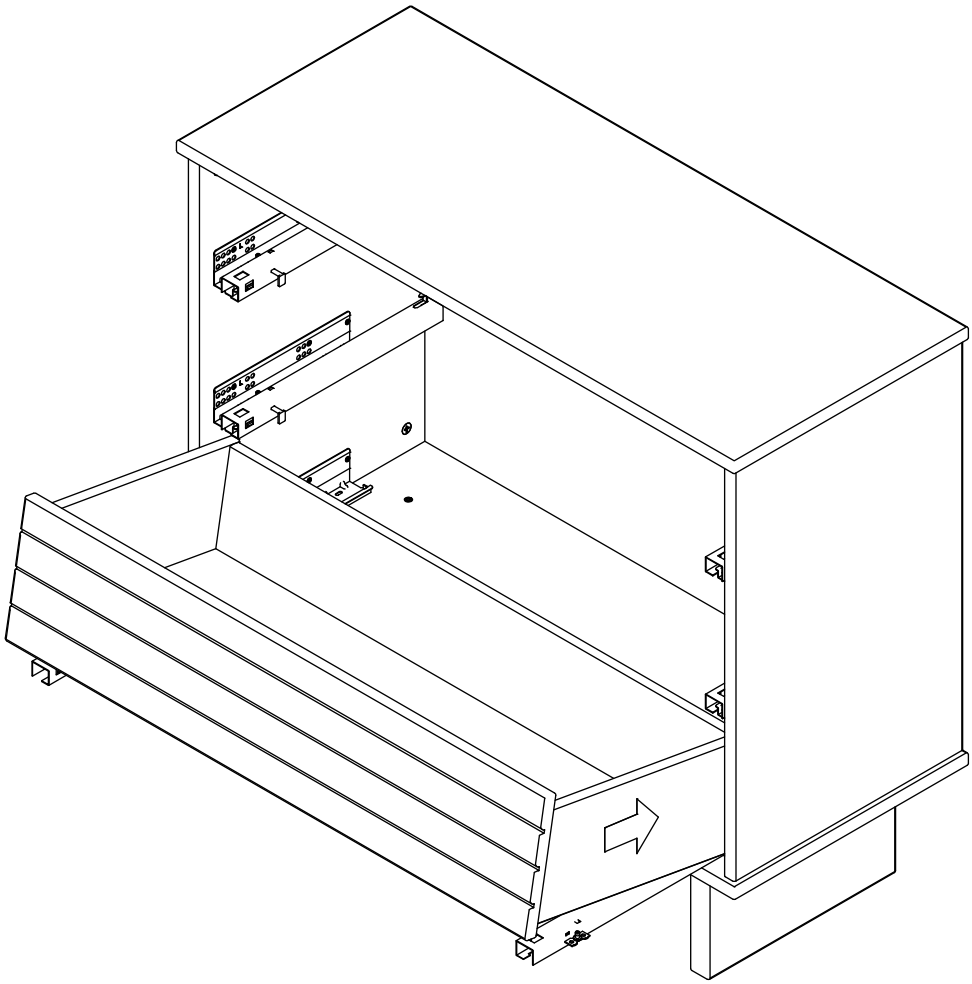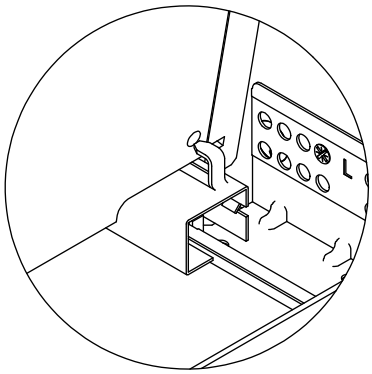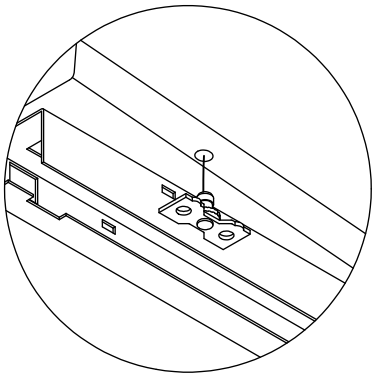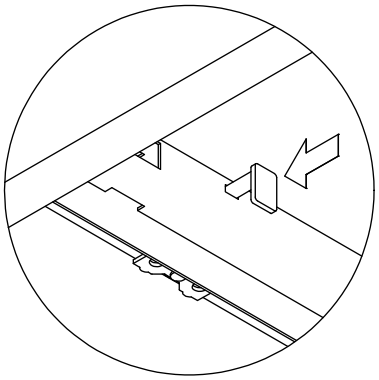
X 3
L