STEP IT UP

step stool | user guide

UMAGE

WITH LOVE FROM COPENHAGEN

At UMAGE, our designers take inspiration from the distinct nature of the Nordic landscape to create unique designs related to the way we live in an urban setting. Influenced by the design language, colours and materials found around us in Scandinavia, we create a collection that is rooted in our home but designed for everyone.

Versatile, flexible and multifunctional, our designs are created to enhance an urban lifestyle in smaller spaces!

DESIGNED BY
JONAS SØNDERGAARD

“ Sometimes a small change
can make a big difference „

ASSEMBLY GUIDE

Ⓐ x 8 pcs.

Ⓑ x 8 pcs.

Ⓒ x 8 pcs.

Ⓓ x 8 pcs.

Ⓔ x 8 pcs.

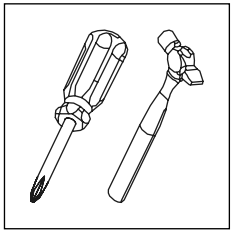

⑦ x 1 pc.

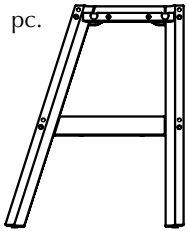

⑤ x 1 pc.

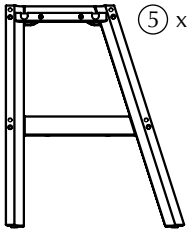

⑥ x 1 pc.

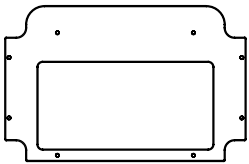

Ⓕ x 1 pc.

④ x 1 pc.

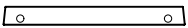

③ x 1 pc.

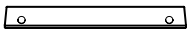

⑨ x 1 pc.

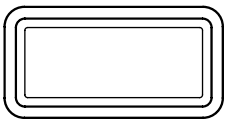

⑧ x 1 pc.

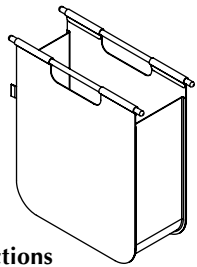

② x 1 pc.

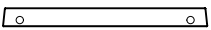

① x 1 pc.

Find assembly videos by using the QR code
or by going online at our website **umage.com/instructions**

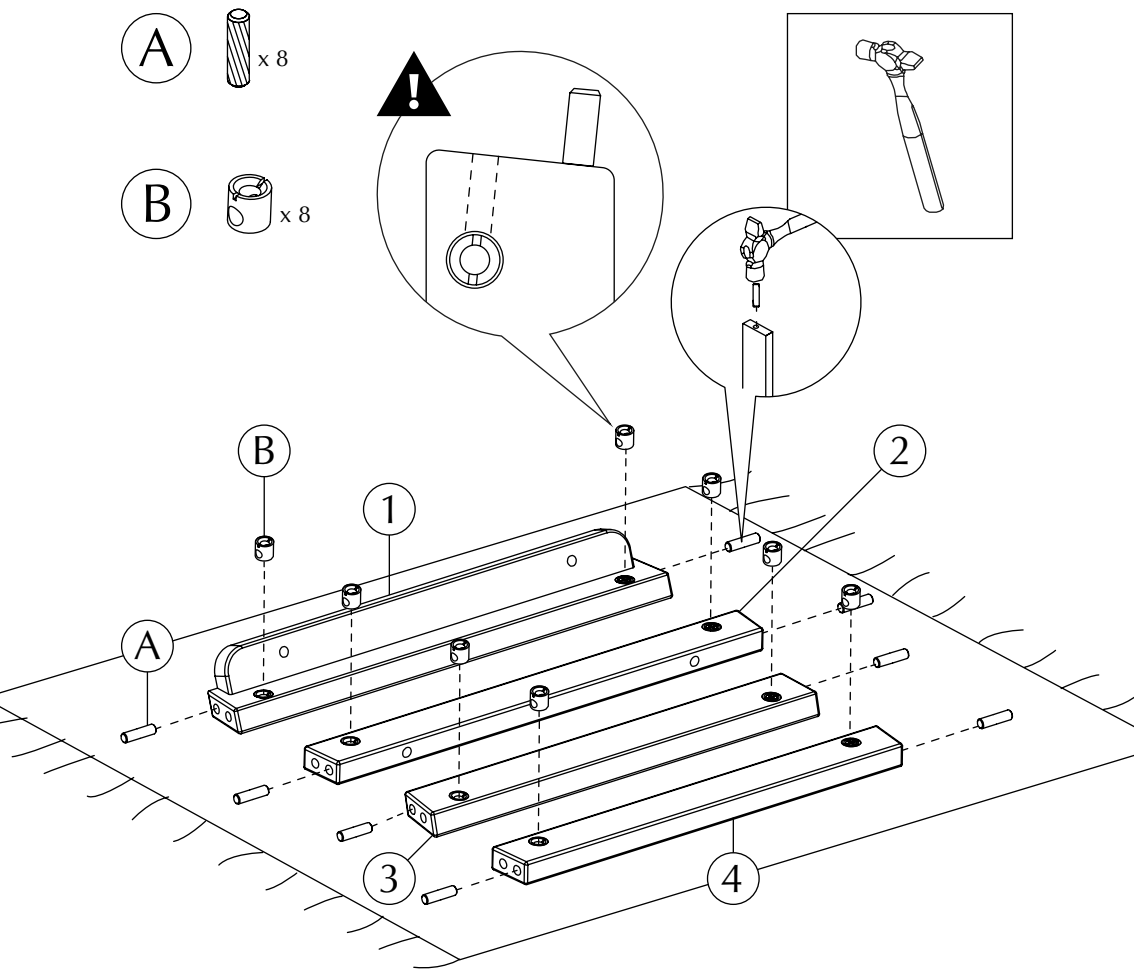
A
x 8
B
x 8
B
1
2
A
3
4

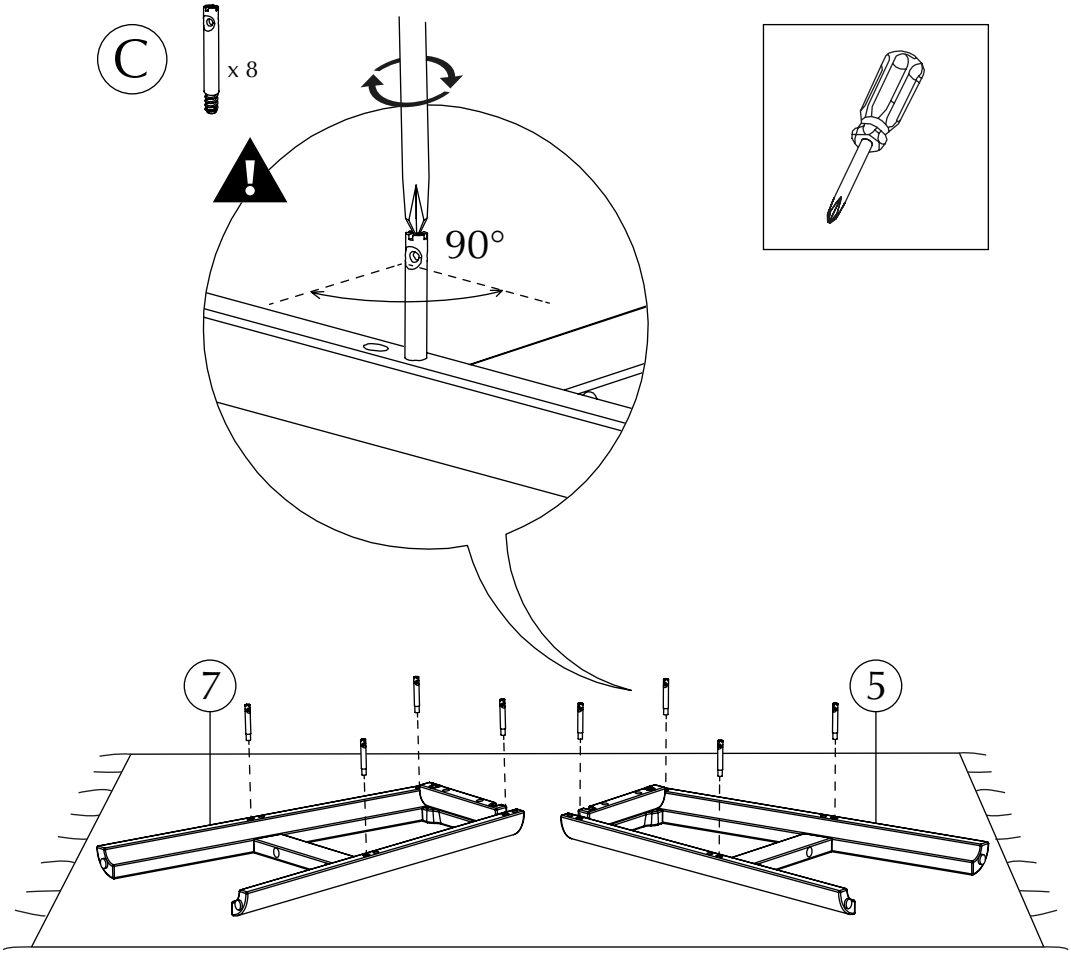
C
x 8
90°
7
5

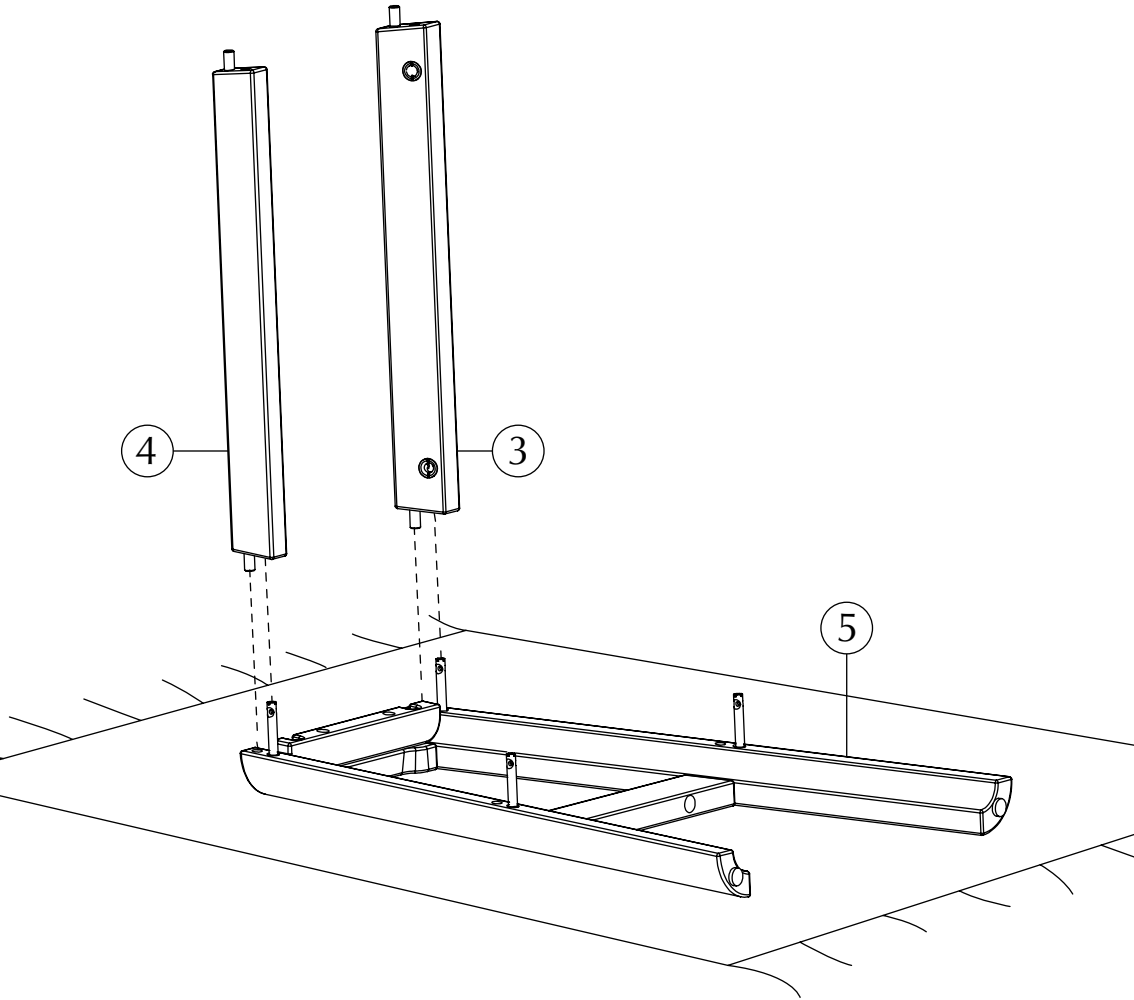
4
3
5

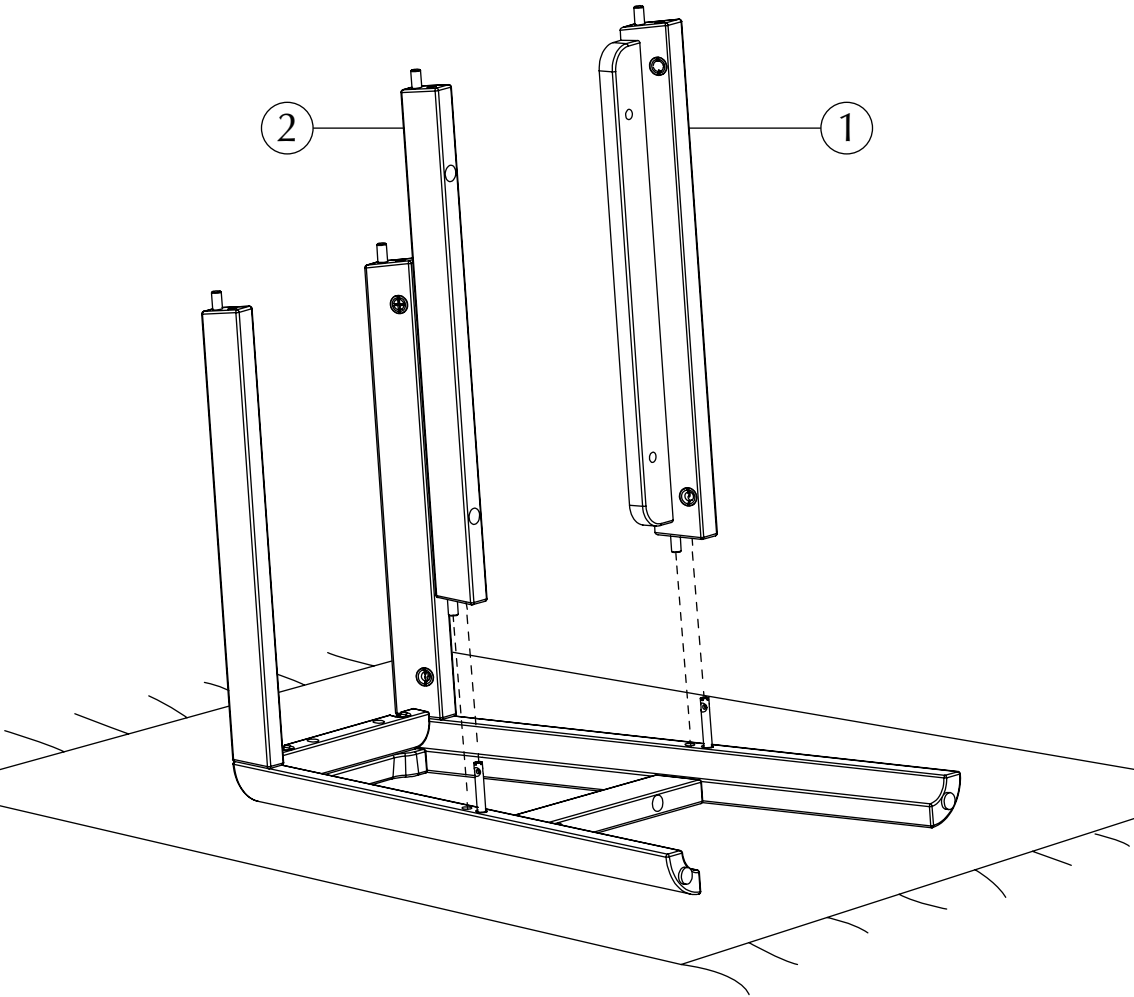
2
1

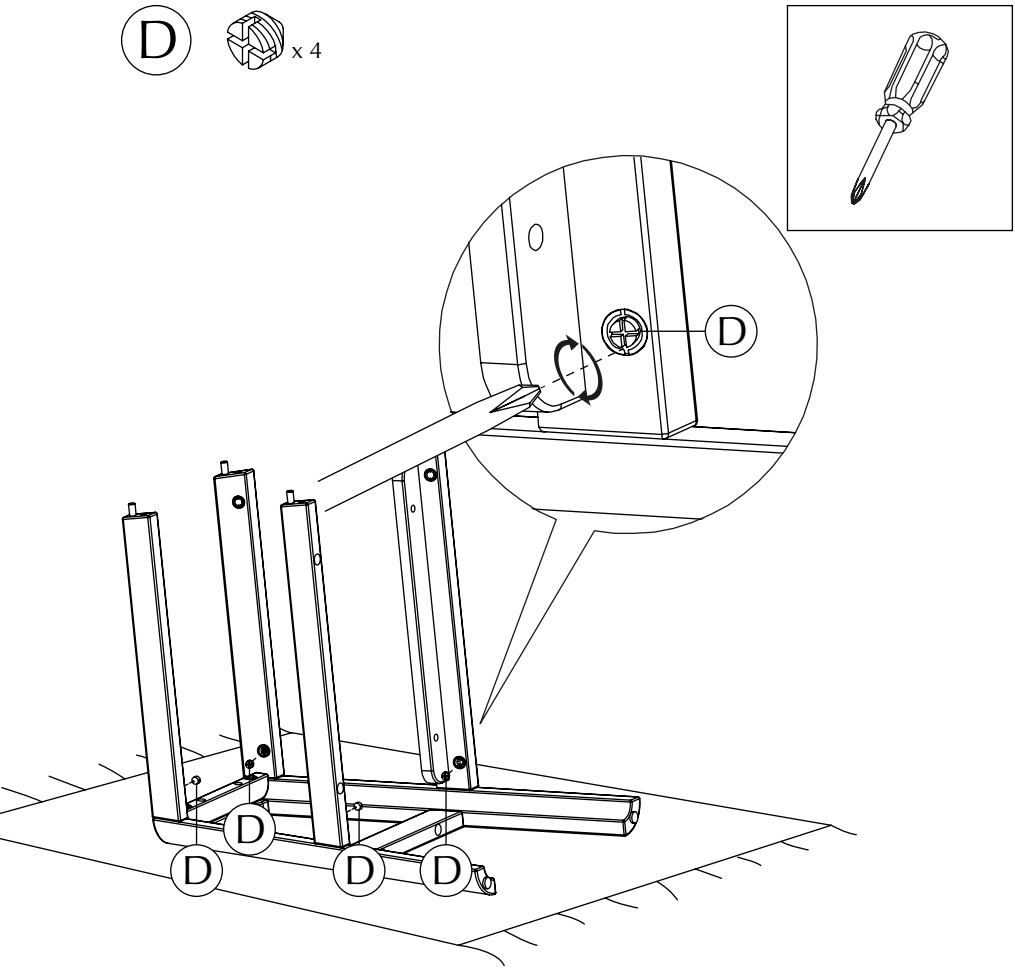
D
x 4
D
D
D
D
D

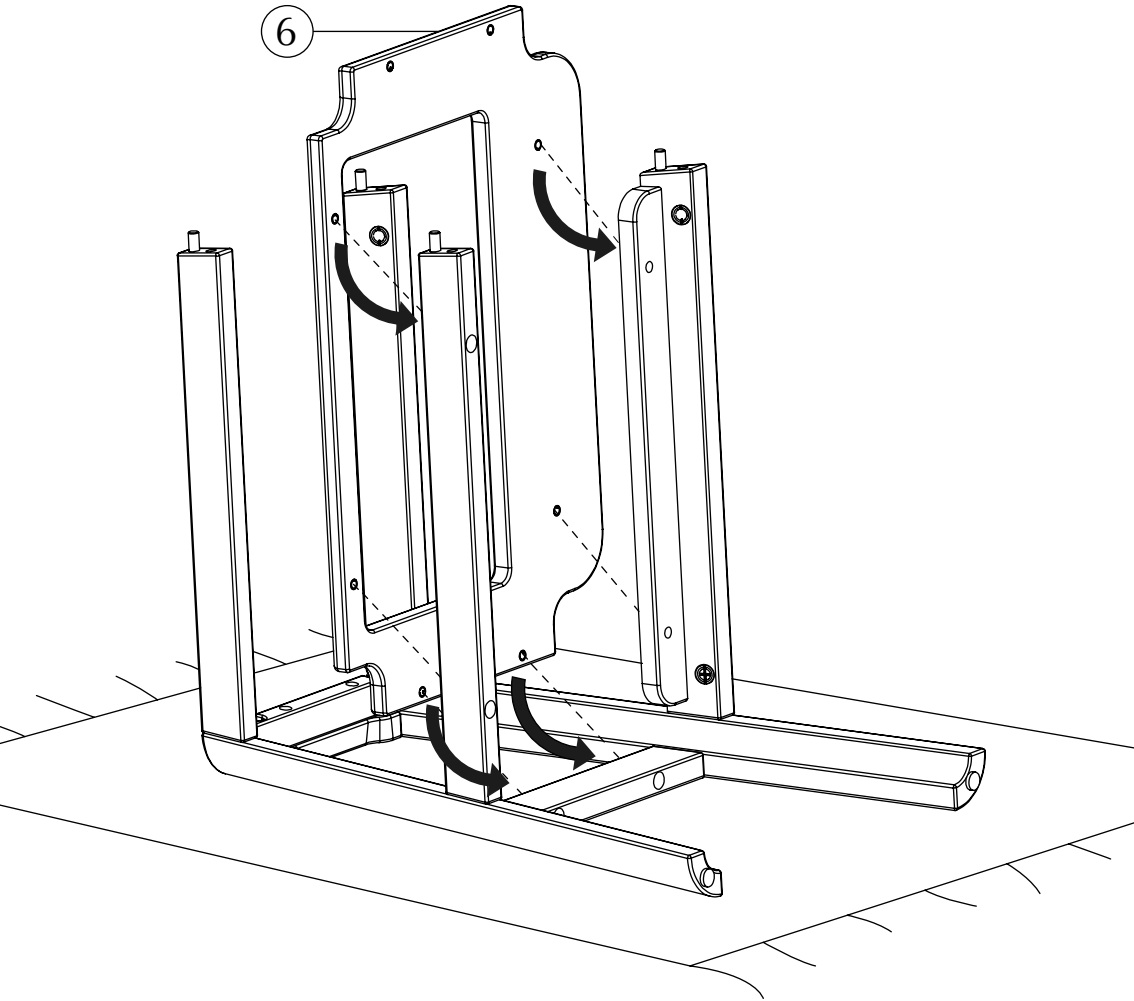
6

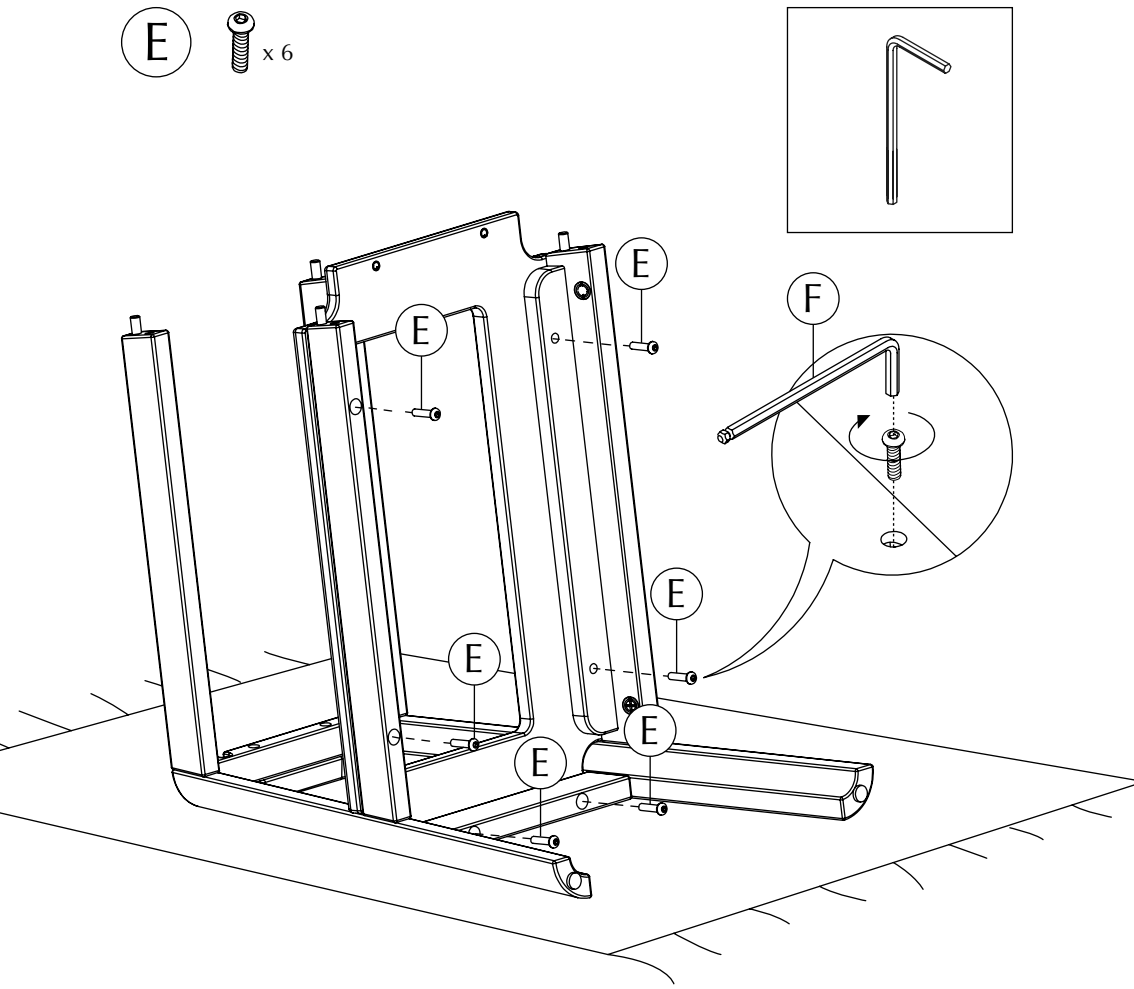
E
x 6
E
E
E
E
E
E
F

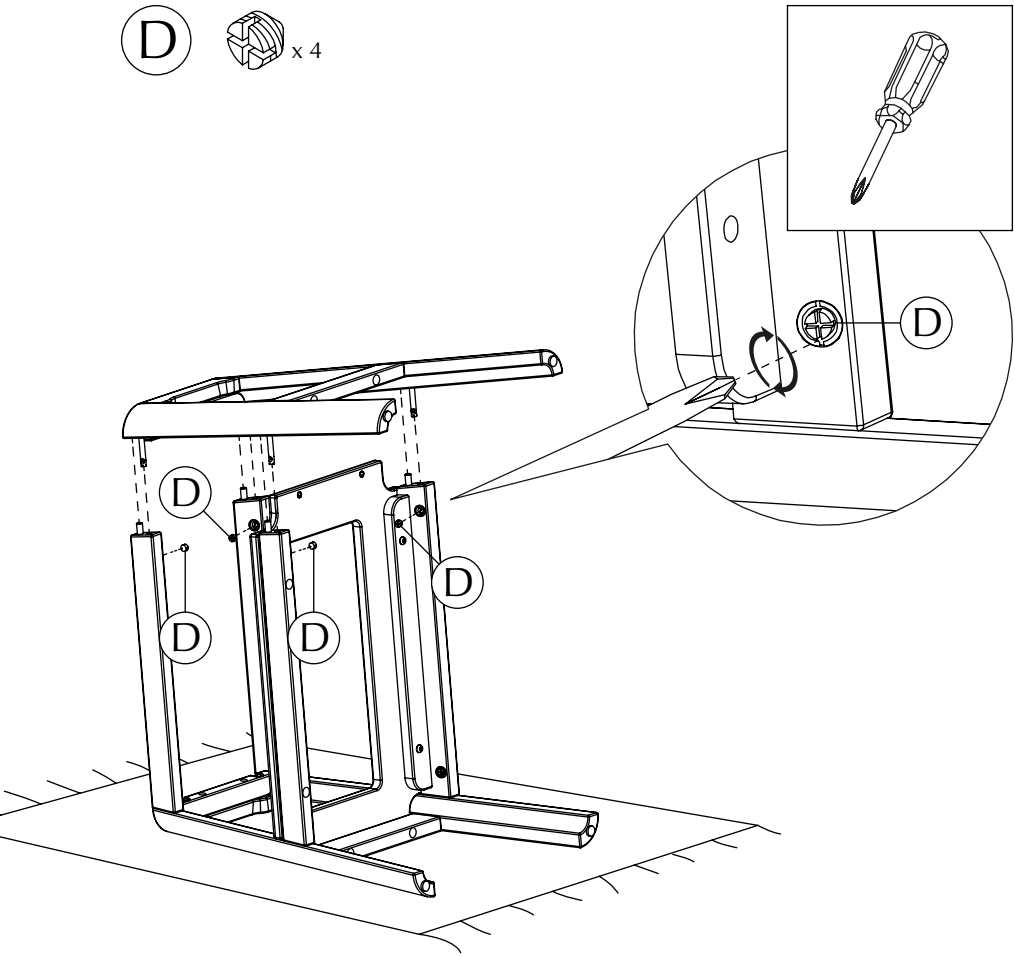
D
x 4
D
D
D
D
D

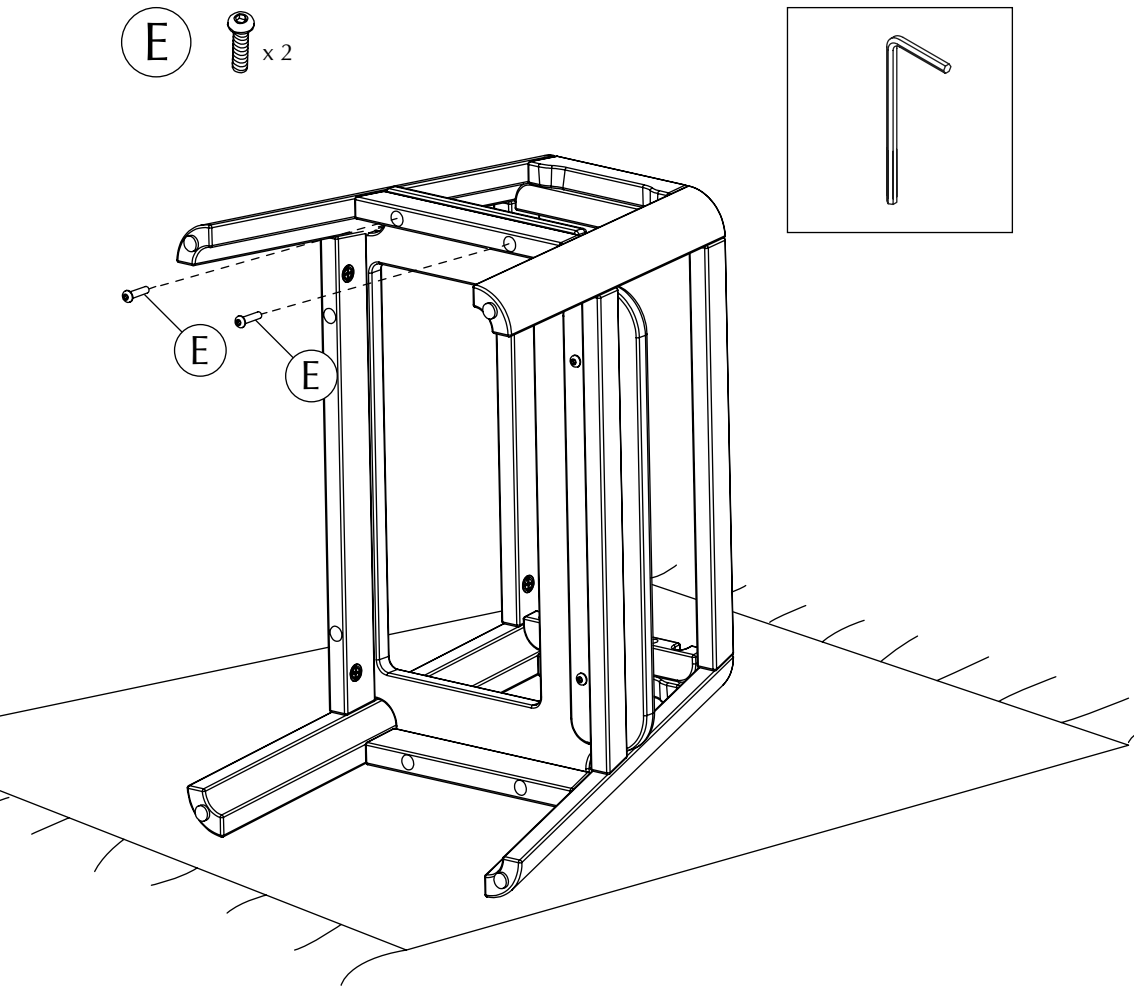
E
x 2
E
E

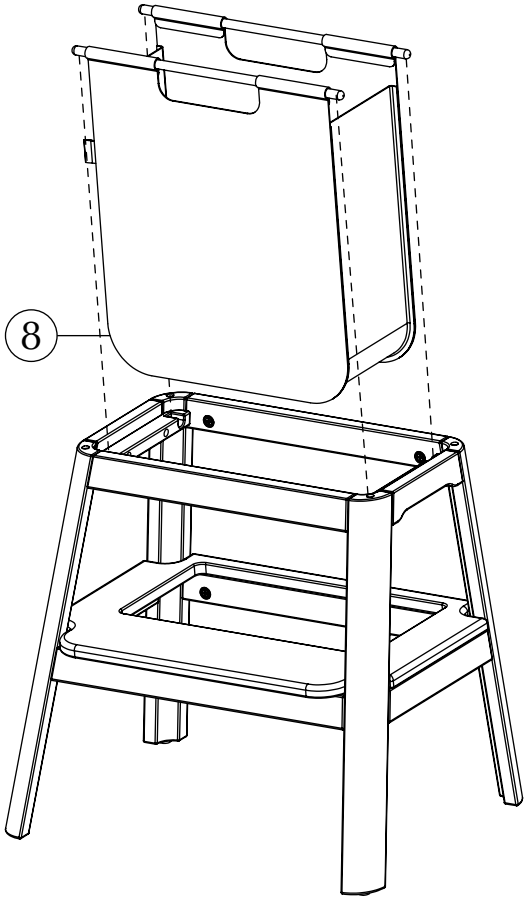
8

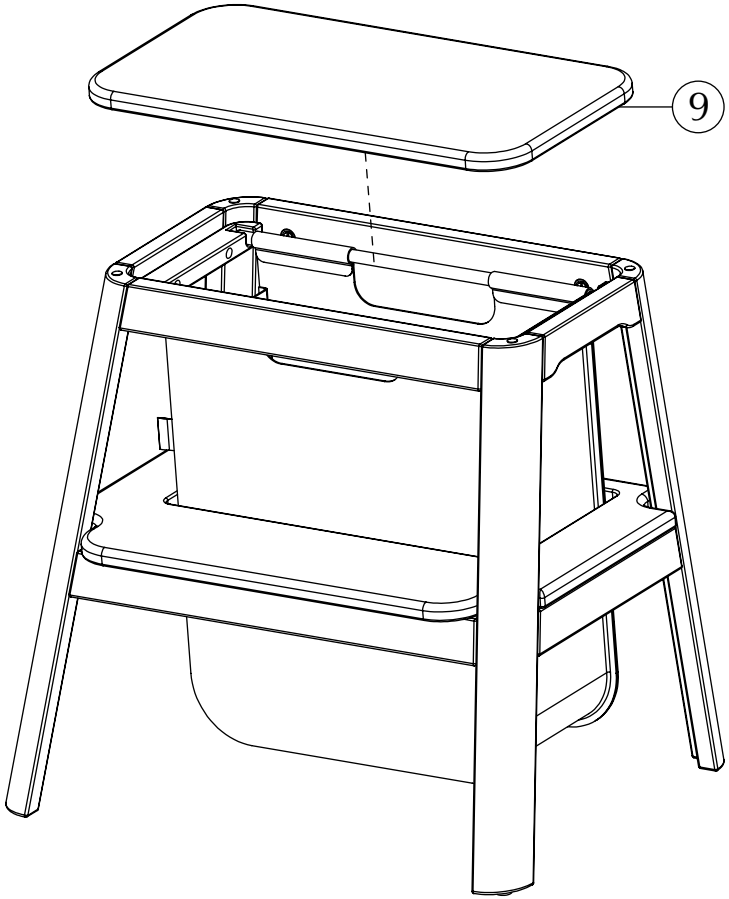
9

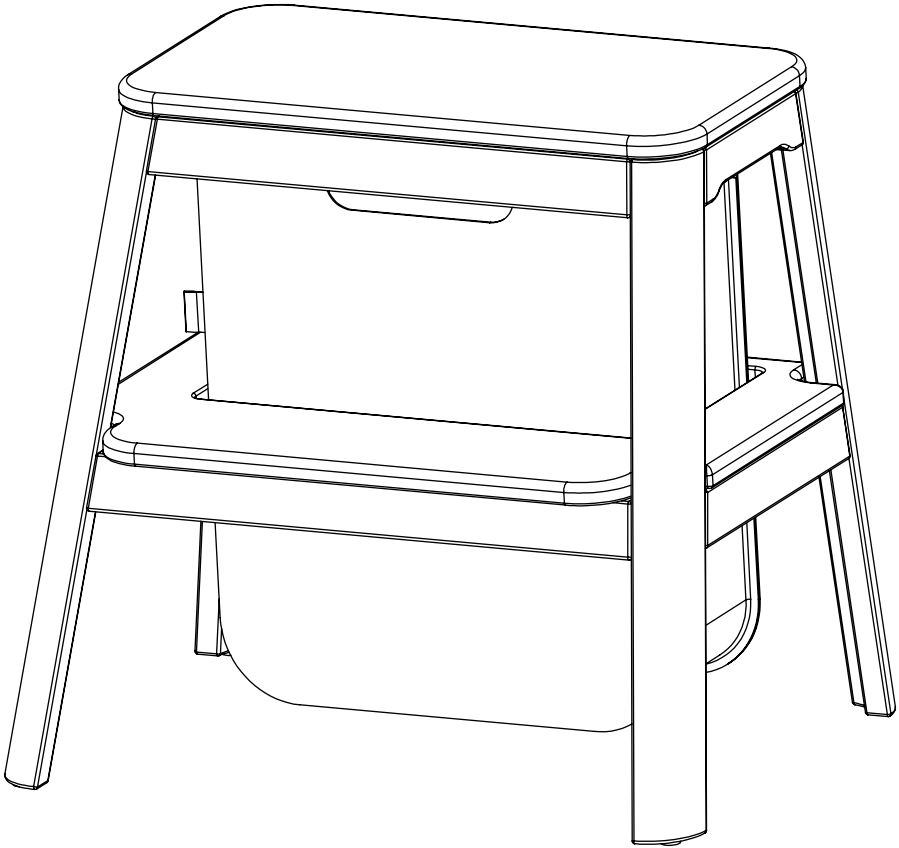

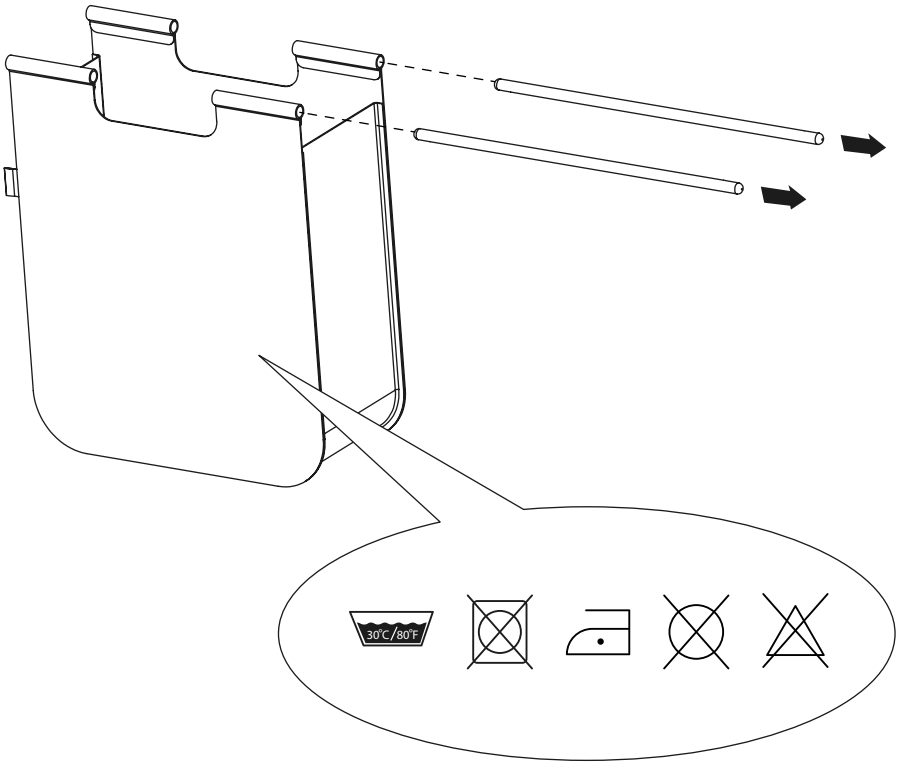
30°C/80°F

CARE AND MAINTENANCE

Please follow the below care and safety instructions to ensure a long lifetime for your new UMAGE design.

ABOUT WOOD FURNITURE

Each piece of wood reveals different patterns of grain depending on the way it is cut. This is one of the characteristics and natural beauty of the wood. All wood and veneer surfaces will change colour and mellow over time, which means that new furniture will initially vary in shade from older items.

HOW TO CARE FOR YOUR WOOD FURNITURE

- Dust with a clean, damp, lint free cloth. Frequent dusting will remove abrasive build up, which can damage the finish over time.

- Avoid exposing your furniture to any liquids. All liquids should be wiped up immediately with a soft slightly damp cloth in the direction of the wood grain. If sticky liquid residues do occur, they may be removed with a diluted solution of warm soapy water followed by a clean, damp sponge. The area should then be wiped immediately in the direction of the wood grain with a clean, soft white cloth until completely dry.

- Do not use a very wet cloth or allow any liquid to contact with the wood for a long period of time as this can permanently damage the surface. Wipe up spills immediately.

- Do not use any abrasive cleaner or harsh detergent as this can damage the surface of the furniture. Wipe up spills immediately.

- Polishes must be avoided as they contain silicones which may spoil the furniture's surface when building up over time.

- Make sure all surfaces are protected from heat and liquids by mats and coasters.

- Ensure that a mat or pad is placed under paper when you are writing on the furniture surface.

- Do not place rubber, cork, vinyl or plastic materials on the wood finish as chemicals within may react with the finish if left in contact for an extended period of time.

- Avoid placing furniture next to heat sources such as radiators or fires. Be particularly careful with solid wood as the lack of humidity caused by home heating can cause damage such as warping, cracking or splitting.

- Exposure to sunlight can cause fading of your furniture. Never leave objects in the same place for a long time as this may cause light stain impressions.

- Nail polish remover, hairspray, perfume, potpourri and any other product that contains solvents can damage wood finishes.

Keep these instructions at hand for future reference.

EN | SAFETY INSTRUCTIONS

Please read all instructions carefully before assembling

- The use of power tools to aid assembly is not recommended. Power tools can damage hardware and split wood.
- Never drag furniture when moving it, always lift it.
- Periodically check all fixings to ensure none have come loose. Re-tighten when necessary.
- Please take care when handling or moving the furniture, as careless handling may cause damage or injury.
- Furniture can be dangerous if incorrectly assembled, assembly should be carried out by a competent person.
- Never tilt the product, ensure the product is placed firmly on the ground always.
- No liability will be accepted for damage or injury caused by incorrectly installed or assembled furniture.

DE | SICHERHEITSHINWEIS

Bitte lesen Sie vor der Montage alle Anweisungen sorgfältig durch

- Die Verwendung von Elektrowerkzeuge zur Unterstützung der Montage wird nicht empfohlen. Elektrowerkzeuge können Hardware und Split-Holz beschädigen.

- Ziehen Sie nie Möbel, wenn Sie die verschieben, heben Sie es immer an.

- Überprüfen Sie regelmäßig alle Befestigungen, um sicherzustellen, dass keine lose geworden sind. Bei Bedarf wieder anziehen.

- Bitte achten Sie bei der Handhabung oder beim Umzug der Möbel darauf, dass eine unsachgemäße Handhabung zu Schäden oder Verletzungen führen kann.

- Möbel können gefährlich sein, wenn Sie falsch montiert sind, daher sollte die Montage von einer kompetenten Person durchgeführt werden.

- Kippen Sie das Produkt niemals, stellen Sie sicher, dass das Produkt immer fest auf den Boden gestellt wird.

- Für Schäden oder Verletzungen, die durch falsch installierte oder montierte Möbel entstehen, wird keine Haftung übernommen.

FR | CONSIGNES DE SÉCURITÉ

Veuillez lire attentivement toutes les instructions avant l'assemblage

- L'utilisation d'outils électriques pour faciliter l'assemblage n'est pas recommandée. Les outils électriques peuvent endommager le matériel et fendre le bois.

- Ne jamais faire glisser les meubles en les déplaçant, toujours les soulever.

- Vérifiez régulièrement toutes les fixations pour vous assurer qu'elles ne se sont pas détachées. Resserrer si nécessaire.

- Veuillez faire attention lorsque vous manipulez ou déplacez le meuble, car une manipulation imprudente peut causer des dommages ou des blessures.

- Les meubles peuvent être dangereux s'ils sont mal assemblés, le montage doit être effectué par une personne compétente.

- N'inclinez jamais le produit, assurez-vous que le produit est toujours fermement posé sur le sol.

- Aucune responsabilité ne sera acceptée pour les dommages ou blessures causés par des meubles mal installés ou mal montés.

ES | INSTRUCCIONES DE SEGURIDAD

Por favor, lea todas las instrucciones cuidadosamente antes de armar

- No se recomienda el uso de herramientas eléctricas para ayudar al ensamblaje. Las herramientas eléctricas pueden dañar el equipo y dividir la madera.

- Nunca arrastre los muebles al moverlos, siempre levantelos.

- Revise periódicamente todas las fijaciones para asegurarse que ninguna se ha soltado. Vuelva a apretar cuando sea necesario.

- Tenga cuidado al manejar o mover los muebles, ya que un manejo descuidadoso puede causar daños o lesiones.

- Los muebles pueden ser peligrosos si se ensamblan incorrectamente, el montaje debe ser llevado a cabo por una persona competente.

- Nunca incline el producto, asegúrese de que el producto esté firmemente colocado en el suelo siempre.

- No se aceptará ninguna responsabilidad por daños o lesiones causados por muebles montados incorrectamente.

DK | SIKKERHEDSVEJLEDNING

Læs venligst alle instruktioner omhyggeligt inden montering

- Brug af elektronisk værktøj til montering anbefales ikke. Elektronisk værktøj kan beskadige produktet og medføre revner i træet.

- Det anbefales ikke at trække møblet ved flytning. Møblet bør altid løftes.

- Kontroller jævnligt alle fæstninger for at sikre at alle er fastspændte. Efterspænd om nødvendigt.

- Vær forsigtig ved håndtering eller flytning af møblerne, da skødesløs håndtering kan forårsage skade.

- Møbler kan være farlige, ved ukorrekt montering og bør derfor altid monteres af en egnet person.

- Produktet bør aldrig kunne vippe, sørg altid for at møblet er anbragt fast på jorden.

- Skader forårsaget ved ukorrekt montering eller håndtering af produktet er på eget ansvar.

SE | SÄKERHETSINSTRUKTIONER

Vänligen läs instruktionerna noggrant innan montering

- Användning av elektriska verktyg avrådes då det kan skada produkten.
- Vid förflyttning, lyft möbeln.
- Genomför periodisk tillsyn av infästningar för att säkerställa att de sitter fast. Dra åt vid behov.
- Var försiktig när du hanterar eller flyttar möbeln då oförsiktighet kan ge upphov till skador.
- Möbeln kan vara skadlig om den är monterad inkorrekt. Montering bör utföras av lämplig person.
- Luta inte möbeln, säkerställ att produkten alltid står stabilt på golvet.
- Inget ansvar kommer att accepteras för skador på sak eller person, som orsakats av felaktigt installerade eller monterade möbler.

A CONVERSATION PIECE dark oak | dusty rose
MY SPOT dark oak | brass
AUDACIOUS CABINET dark oak | silver grey

ACORN
white | polished brass

THE READER
oak | slate grey

UMAGE

UNFOLD AT HOME

GET THE FREE UMAGE APP

Preview our entire collection in your own home – before you buy

Imagine an UMAGE lamp or furniture piece in your home. Is it the right design, size and colour? We made it easier for you to find the perfect UMAGE design. Just download our free **UMAGE Unfold at Home** app from the App Store or Play Store, and see how our designs will look in your home!

Download on the App Store

GET IT ON Google Play

FOLLOW US ON SOCIAL MEDIA

@umagedesign | #umagedesign | umage.com

UMAGE

191211