STEP IT UP | STEP STOOL

Designed by Jonas Søndergaard

DIMENSIONS
W x H x D: 55 x 48 x 38 cm / 21.9 x 19.1 x 15"

MATERIAL
Solid oak, MDF, Polyester and Hardwood

CONSTRUCTION
Frame: Painted solid hardwood. **Legs:** Painted solid hardwood. **Lid:** Painted MDF. **Fabric:** Washable polyester. **Bag handles:** Solid oak.

PACKAGING DIMENSIONS
(L x W × H): 58 x 48 x 17.5 cm / 22.8 x 18.9 x 6.9"

ASSEMBLY TIME
30 min - video guide at umage.com

MEDIA KIT
Photos and press material
Download at umagepress.com

ORDERING INFORMATION

Step It Up pearl white	#5414
Step It Up anthracite grey	#5415
Step It Up ruby red	#5416
Step It Up saffron yellow	#5617

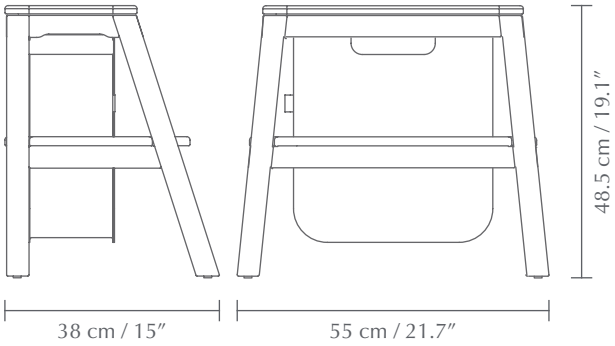

Colour variations

pearl white (RAL: 9001)	anthracite grey (RAL: 7016)	ruby red (RAL: 3032)	saffron yellow (RAL: 1004)

UMAGE

STEP IT UP | STEP STOOL

Designed by Jonas Søndergaard

STEP IT UP™ FOR THE ENVIRONMENT

The step stool that will help you to reach the higher shelves in the kitchen and encourage you to step it up for the environment – hence the name.

Step It Up™ holds a storage bag that can be taken out and used for grocery shopping, to store your recycled bottles, or other things that you simply need space to store. The new step stool encourages you to minimise the use of plastic bags and sort your recyclable waste, making it easier to take better care for the environment in your everyday life, while enhancing the functionality in our living space.

The step stool comes in two subtle and two vibrant colours so there a little something for every taste. You can step up from three sides of the stepping stool and it has antifriction shoes to make sure you always have a steady balance on the stool. The bag can be washed in the washer on 30 degrees.

Find more info on our website umage.com

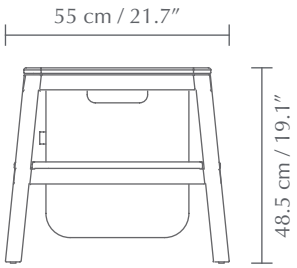

UMAGE

The specifications and dimensions are subject to change without notice. Document date: 30-11-2020 | info@umage.com | umage.com
Kongens Nytorv 15, DK-1050 Copenhagen K | +45 31 39 31 31 (tel) & 185 Wythe Ave 2FL, Brooklyn, NY 11249 | +1 646-790-7171 (tel)